Eddyfi Robotics Inc
2569 Kenworth Road, Suite C
Nanaimo, BC, V9T 3M4
CANADA

+1.250.729.8080
info@eddyfitechnologies.com
www.eddyfitechnologies.com

Magg™ 310

MAGNETIC INSPECTION CRAWLER

Table of Contents

About This Manual 4

System Description 4

- Specifications 5
- Precautions 6
- Certification 6
- Vehicle Overview 6
- Dimensions 7
- Safety 8
- Intended Use 10
- Laser Lines 11

System Setup 12

- Personnel Requirements 12
- Working and Storage Environment 12
- System Power 13
- Galvanic Corrosion Control 13
- ICON™ Portable Controller Connection 13
- Vehicle and Tether Connection 13
- Portable Reel Setup 14
- Mini-Reel Setup 15
- Tether Handling 16
- Connector Handling 16
  - SubConn Connector: Lubrication and Cleaning 17
  - Impulse Connector: Lubrication and Cleaning 17

Vehicle Configuration 18

- Camera Mounting 18
  - Standard Mounting 18
  - Pole Mounting 19
  - Alternate Mounting 19
- Magnet Spacing 21
- Fall Arrest 22

Operation 23

Pre-Operations Check 23
Post-Operations Check 24
ICON™ Software 25
Driving the Vehicle 25
Maintenance 25
Galvanic Corrosion Control 25
Rinsing and Cleaning 26
Fuse Replacement 27
Microtrac™ Maintenance 27
Tether Re-termination 27
Troubleshooting 28
Camera Control Problems 28
Video Issues 28
Vehicle Issues 29
Tether Reel Issues 29
Parts and Repairs 30
Ordering Parts/Customer Service 30
Warranty Repairs 30
Factory Returns to Canada 31
Product/System Drawing Package Availability 31
Limited Warranty Policy 31

About This Manual

This manual has been prepared to assist you in the operation and maintenance of your Eddyfi Technologies equipment. Correct and prudent operation rests with the operator who must thoroughly understand the operation, maintenance, service, and job requirements. The specifications and information in this manual are current at the time of printing.

This product is continually being updated and improved. Therefore, this manual is meant to explain and define the functionality of the product. Furthermore, schematics or pictorials and detailed functionality may differ slightly from what is described in this manual.

Eddyfi Technologies reserves the right to change and/or amend these specifications at any time without notice.

Information in this manual does not necessarily replace specific regulations, codes, standards, or requirements of others such as government regulations.

This manual copyright © 2021 by Eddyfi Robotics Inc. All rights reserved.

System Description

The Inuktun Magg™ 310 is a magnetic tracked crawler capable of driving vertically or inverted along ferrous surfaces. Additionally, the magnet modules allow the vehicle to pull longer lengths of tether than could normally be achieved without magnets, when travelling horizontally in steel pipes or on steel decks. The crawler features a high-definition camera with a full 360-degree continuous tilt range and minimal viewing obstruction near the back of the vehicle. The vehicle uses two extended 4000 series Microtracs™ mounted underneath the main chassis plate and can be moved up or down to accommodate different pipe sizes and configurations.

Specifications

Min Vehicle Dimensions			194 x 286 x 280 mm (7.6 x 11.3 x 11 in)
Vehicle Weight[1]			6.2 kg (14 lb)
Depth Rating			60 m (200 ft)
Min Driving Surface Radius[2]			1.5 m (60 in)
Maximum Tether Length[3]			100 m (330 ft)
Tracks			2x Microtracs™ 4000
Camera	Lights	Standard	2x High intensity LEDs
		Optional	2x High intensity LED Spot Lights @ 20 °
	Lasers	Optional	2x Vertical Laser Lines (635 nm) @ 70 mm (2.75 in) Spacing
	Tilt	Range	360 ° Continuous
		Speed	0 – 9 °/s
	Sensor		1/2.8in Exmor R CMOS
	Lens	Standard	f = 3.8 to 38 mm
			120x Zoom (10x Optical, 12x Digital)
			67 ° HFOV (air)
	Focus		Manual or Auto
	Resolution		1920 x 1080
	Format		HD 1080i (60 fps)
	Minimum Illumination		1.4 lux
	Depth of Field		10 mm (0.4in) to infinity
Reel			Portable tether reel with payout encoder
Power Requirements			100 – 240 VAC 50/60Hz, 5A
Operating Temperature			0 – 50 ºC (32 –122 ºF)
Storage Temperature			-20° – 60 ºC (-4 –140 ºF)

[1] Weights may vary depending on optional components.
[2] Minimum surface radius is based on magnetic adhesion when driving vertically or inverted – see *Magnet Spacing.*
[3] Actual travel distance may be decreased depending on inspection geometry (traction and number of bends).

Precautions

IMPORTANT: When configuring a 70V system, check to see if the tracks are compatible. Older versions of 4000 series Microtracs™ are not 70V compatible. Look for the Wide Input Voltage symbol **\V/** located on the side plate of the track indicating 70V compatibility.

Certification

This system is built in accordance with the Low Voltage Directive 2006/95/EC and Directive 2014/35/EU, Machinery Directive 2006/42/EC, and Electromagnetic Compatibility Directive 2004/108/EC and Directive 2014/30/EU.

Vehicle Overview

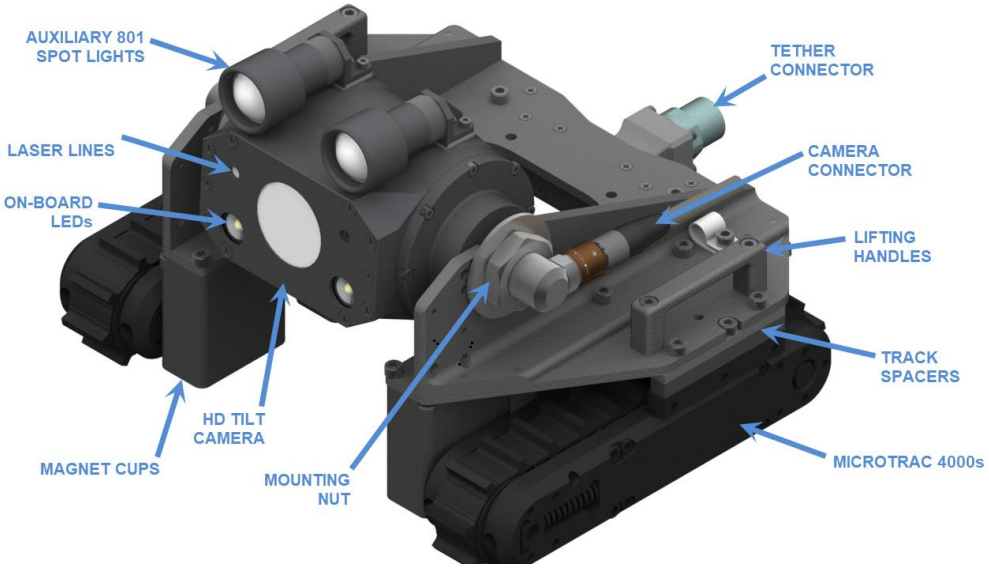

Dimensions

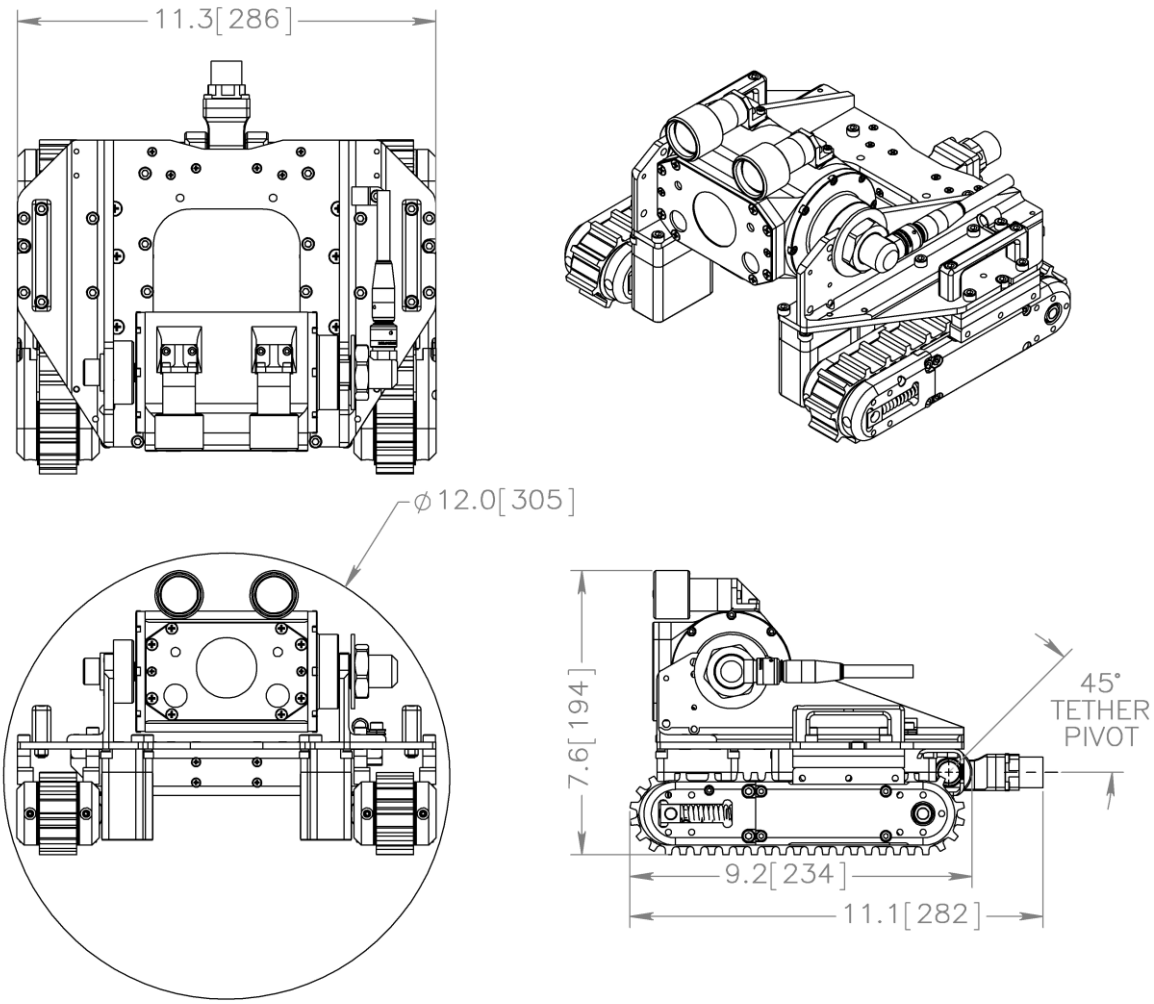

Safety

To use this product properly and safely, every user must first read these operating instructions and observe the safety instructions contained therein. Take care of these operating instructions and keep them in a place where they can be accessed by everyone. Untrained personnel should not handle or operate this equipment.

CAUTION: Failure to follow these safety instructions may result in injury or equipment damage.

WARNING: Hazardous Voltage 36-70 VDC. If the equipment is powered from a source other than an Eddyfi Technologies provided controller, the power supplied to the product must have reinforced isolation from the mains with no reference to earth ground.

WARNING: Magnetic Pinch Hazard – The magnetic chassis is fitted with rare earth magnets. These magnets are very strong and create an immanent pinch hazard. Use caution when handling the magnets or vehicle near steel objects and tools, they may snap together unexpectedly.

WARNING: Medical Hazard – Operators with magnetically sensitive medical implants should be aware of and follow appropriate practices.

WARNING: Electronic Device Interference – Magnetically sensitive devices, including computer hard drives, cell phones, watches and credit cards may be disrupted or damaged by the magnetic field.

Note: Rare earth materials are mechanically weak, and magnetically very strong. They must therefore be handled very carefully to avoid damage.

Note: To reduce risk of injury and damage to equipment, always store the Magg™ 310 vehicle in its **magnetically shielded storage and shipping box** or store the magnets on a **steel plate** when not in use.

Note: We strongly recommend using gloves when handling the vehicle to reduce magnetic pinching hazard.

	Warning: Avoid Magnetic Slamming. Extreme care must be taken when handling the vehicle, particularly when placing it onto a wall or into its storage box. Without taking heed of the sudden pull of the magnetic field onto a surface, the Magg™ 310 can be slammed down hard causing damage to the vehicle. Using a solid grip on the vehicle, we recommend touching down the vehicle by one end first and then pivoting flat.	

WARNING: Intense Optical Radiation - The Magg™ 310 camera lights are extremely bright. Never look directly at the lights. Use a welding filter (shade #8 or higher) if inspecting the LEDs.

- **CAUTION: Class II Laser:** Do not intentionally stare into the beam. Typically, Class II relies on the blink reflex to limit exposure to no more than ¼-second. Intentionally staring into the beam can cause eye injury.
- When performing maintenance or functional checks of the lasers and camera lights, take precautions to protect nearby personnel from unintended exposure which could be temporarily blinding.
- Observe safe lifting practices. For storage and shipping, the Magg™ 310 system is packed in three parts: Controller, Vehicle and Tether. Each of the three components is either built or packed into a Pelican case with carrying handle. The heaviest case containing the tether and mini-reel is equipped with wheels and extending handle like a suitcase.
- Do not operate the system with damaged wires. A short circuit may damage the power system, telemetry system, cameras, or attached equipment. Exposed wires may also create a shock hazard.
- Disconnect the power source before servicing the product; otherwise, damage may result.
- Although designed for durability, the vehicle and its components or attached devices may suffer structural damage if dropped or impacted. A lifeline or fall arrest system should be used at all time when the vehicle is navigating on a vertical or inverted horizontal position. In addition, stepping on the tether may pull the vehicle off the wall causing it to fall and sustain physical damage.
- All personnel operating or maintaining this equipment must be trained and competent.
- Our equipment is used in many varied environments from hot/dry to confined spaces to deep underwater. Such diverse environment risks must be addressed by the operators who are trained to work in such surroundings. As such, the operator is responsible to determine safe site setup and appropriate personal protective equipment (PPE) for operation and maintenance of the equipment.

WARNING: Spark Hazard - Under no circumstances should this equipment be used in a potentially explosive atmosphere.

WARNING: Trip Hazard - Never stand on the tether. A snap load to the tether may pull it out from underneath you and cause you to fall. Standing on the tether may also damage its internal conductors, cause unnecessary wear, and decrease its life.

WARNING: High Temperature - The camera head and auxiliary lights may become extremely hot during operation. Allow a cool-down period before handling.

WARNING: Falling Object - A lifeline or fall arrest system should be used at all times when the vehicle is navigating on a vertical or inverted horizontal position. When the vehicle is climbing, never stand below the vehicle operations area.

Intended Use

The Magg™ 310 is an industrial inspection vehicle intended for crawling on steel walls, tanks and structures and to provide close-up or zoom HD video of the inspection target, which could be a weld, paint covering, etc. The Magg™ 310 may be used above or below the waterline up to 60 m (200 ft) deep, or in dry environments. It may also be used in non-magnetic environments with removal of the magnet cups.

Typical applications include:

- Underwater weld and paint inspection.
- Potable water system inspection.
- Steel Tank inspection.
- Large diameter pipe inspection.
- Mobile robotics and remote sensing.
- Reactor vessel inspection.

Misuse of the system is deployment in a situation for which it is not rated, or incorrect handling.

Examples of misuse include:

- In a vacuum.
- Beyond its depth rating without factory approval.
- Above or below its temperature rating.
- Use in a potentially explosive atmosphere.
- Use in incompatible chemical environments.
- Very high radiation environments (Beta / Gamma).
- Prolonged overload (Payload or pulling load).
- Camera pointed at the Sun or at intense lighting.
- Mechanical impacts & scraping during deployment / magnetic slamming / dropping.
- In salt water without an anode.

Laser Lines

The Magg™ 310 is equipped standard with vertical laser lines (Class 2 lasers at 635 nm, 1.5 mW). Laser line separation is 70 mm (2.75 in).

CAUTION: Class II Laser: Do not intentionally stare into the beam. Typically, Class II relies on the blink reflex to limit exposure to no more than ¼-second. Intentionally staring into the beam can cause eye injury.

When performing maintenance or functional checks of the lasers and camera lights, take precautions to protect nearby personnel from unintended exposure which could be temporarily blinding.

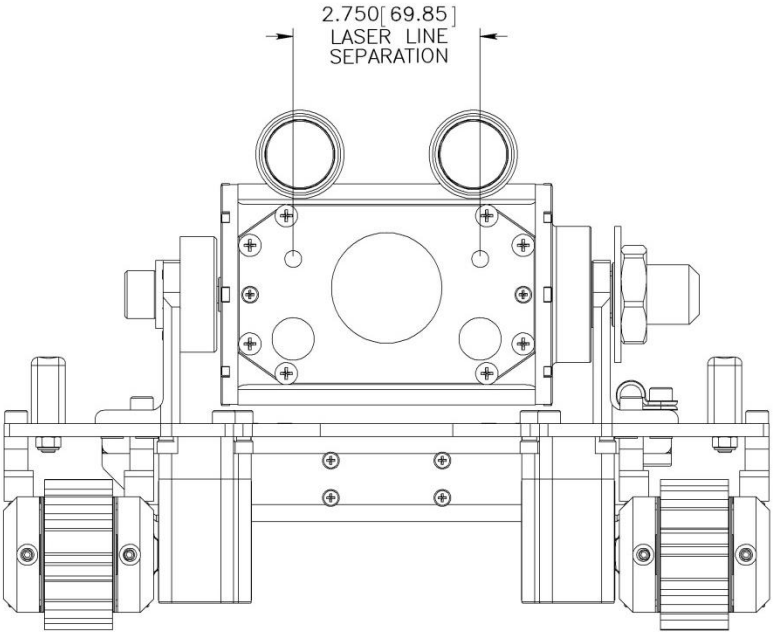

System Setup

Personnel Requirements

Basic deployment of the Magg™ 310 system may be performed by one person. Operations at more complex worksites may require two people, especially when the console location is removed from the point of deployment.

- **Console Operator:** This person is responsible for driving the vehicle, watching the location of the inspection and making comments about it and the surrounding conditions. It is also the operator's responsibility to assess whether the location of the inspection is in the appropriate condition for safe passage of the vehicle or if there is a risk of getting stuck. The operator may also assist in general site setup (cones, warning signs, etc.), vehicle maintenance and configuration.
- **Deployment / Tether Handler / Field Maintenance:** This person has several tasks including:
    - Configuring the vehicle for the current inspection.
    - Placing and retrieving the vehicle to and from the inspection area.
    - Watching the tether as the vehicle enters and exits the inspection.
    - Operating the reel and winding the tether during recovery.

Establish a good channel of communication between the operator and deployment personnel. Good communication can avoid accidents, damage to the equipment, and promotes efficiency and productivity. In particular, the person deploying the vehicle and watching the tether must be able to quickly tell the operator to stop the vehicle if something goes wrong. The operator should never turn on power or initiate movement without first communicating with the vehicle handler.

Working and Storage Environment

The control system (interface box, power supply, and control computer) is to be used in a **dry, covered** environment only. These components are not waterproof. Keep all cords and cables away from water.

The **tether and vehicle** are depth rated to 60 m (200 ft) of water. The tether connector is a wet-mate type which may be wet when plugged in but cannot be plugged in underwater. Keep the tether connector capped with a dummy plug when not connected to the vehicle to help keep out dirt. The tracks are tolerant to sandy and muddy conditions, although this decreases seal life. The vehicle may also be operated in dry or dusty environments.

The portable reel and winch are splash resistant only. Refer to the reel manual.

To maximize component life and minimize deployment time it is recommended that the vehicle and tether be cleaned after use and the entire system stored in a dry, dust free, location.

System **storage temperatures** are between -20 ˚C – 60 ˚C (-4 ˚F – 140 ˚F)

System Power

The Magg™ 310 is operated through an ICON™ Portable Controller, or a Rackmount Interface Box. These controllers provide power to the tether and vehicle.

Refer to the Controller User Manual for further details and power requirements.

If powering the system from a generator or inverter, refer to that unit's operating manual for recommendations on continuous and peak load ratings. These power sources may apply a reduced output rating based on electrical load and environmental temperature. Remember to include the power needs of all other connected devices (external monitors, recording devices, lighting, etc.) when selecting a generator or inverter.

Galvanic Corrosion Control

We strongly recommend cathodic protection whenever the vehicle is being deployed in a saltwater environment, either submerged or in salt spray. We recommend **aluminum** marine anodes exclusively for use with the inspection system. Aluminum anodes are common in the marine industry and are replacing zinc anodes in many areas. For inspection systems that are often pulled in and out of salt water, aluminum anodes are especially important, as zinc anodes tend to scale over when exposed to air and may not reactivate when submerged again. An aluminum anode will always reactivate.

For permanent installations, it is required that the structure to which the system is mounted also be protected by **aluminum** anodes. If the structure is of a dissimilar metal, the system mount must be isolated from the structure. Do not mix anode types (zinc and aluminum) on the assembly. There must be only one anode type throughout the structure. Avoid use of Magnesium anodes altogether.

ICON™ Portable Controller Connection

The ICON™ Portable Controller supplies power to the tether and vehicle. It provides a communication interface to the vehicle. It also provides video reception and distribution.

Refer to the Controller Setup section of the ICON™ Portable Controller User Manual for more information.

Vehicle and Tether Connection

The tether and vehicle are depth rated to 60 m (200 ft) of water. The tether connector and track connectors are dry-mate types which must be dry when making a connection. Keep the tether connector capped with a dummy plug when not connected to the vehicle to help keep out dirt.

It is important that the tether be properly connected to the vehicle.

1. Connect the vehicle end of the tether to the back of the harness block. Visually line up the key in the connector before mating. Fully screw down and hand tighten the locking collar.
2. Verify the track and camera whips from the harness block to their respective components are securely connected, and the whips are free from damage.

Portable Reel Setup

If your system includes a portable reel, follow these steps to operate:

1. Remove the shipping cap from the front of the case and insert the crank handle.
2. Connect the deck cable from the reel to the controller.
3. Disengage the packing brake (pull back and turn on the locking pin).
4. Make sure the friction brake is **engaged** - disengaging the friction brake can result in slack tether resulting in potentially jamming the reel.
5. Unwind some tether and connect the tether to the vehicle.
6. Run the tether through the level wind as follows:
    a. There is an access slot which must be opened by lifting up on the two exposed screw heads to raise the tether support shafts.
    b. Pull up on both sides of the axle on the top wheel and slide the tether beneath it - failing to lift up on the wheel can scuff and damage the tether.
    c. Make sure that the two wheels that sandwich the tether top and bottom in the level wind are tracking properly as the tether is paid out - this tells the controller how much tether the reel has unwound and how far your vehicle has travelled.

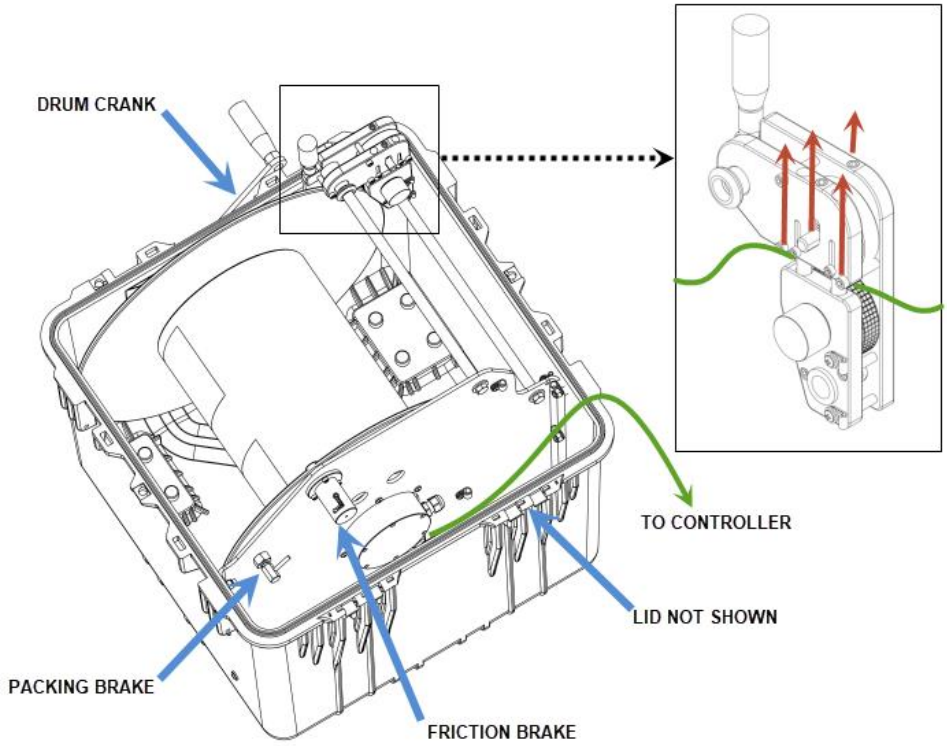

Mini-Reel Setup

If your system includes a Mini-Reel, follow these steps to operate:

1. Remove the Mini-Reel from the shipping case.
2. Connect the deck cable from the reel to the Video Interface and Power Supply.
3. Connect the encoder deck cable from the reel to the Video Interface and Power Supply (if provided with Mini-Reel).
4. **Disengage** the shipping brake.
5. Make sure the friction brake is **engaged** – disengaging the friction brake can result in slack tether resulting in potentially jamming the reel.
6. Unwind some tether and connect the tether to the vehicle.

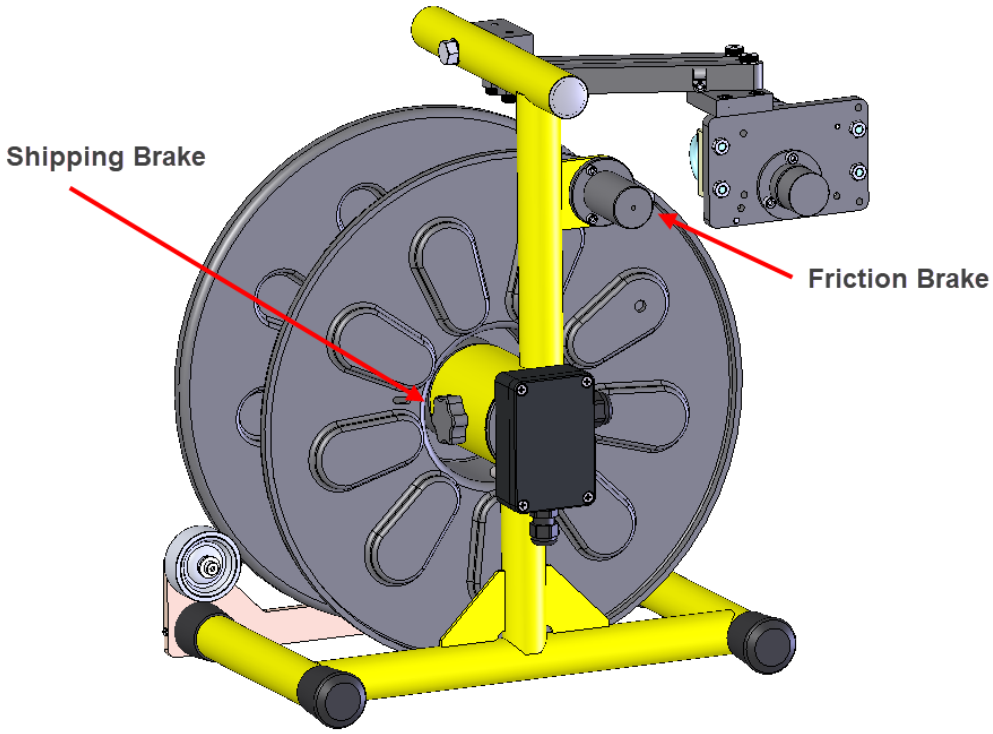

Tether Handling

The tether is one of the most important parts of the system. It feeds power and control signals to the system and returns data to the controller. If the tether is damaged from improper use, poor handling or an accident, the system may become inoperable. This could lead to significant downtime, loss of production, and avoidable costly repairs. It is encouraged to stress the importance of the tether and its use to anyone operating or maintaining the system. For maximum tether life and reliability, we recommend the following tether handling tips.

- Do not step on the tether.
- Do not drive over the tether.
- Do not bend the tether beyond its minimum bend radius.
- Do not kink the tether.
- Do not snap load the tether.
- Avoid loading the tether whenever possible.
- Always use the cable grip strain relief if applicable to your system.
- Regularly inspect the tether for damage.
- Regularly clean the tether.

Note: Protecting the conductors inside the tether is critical to the life and operation of the tether. Proper tether handling and care will result in extended tether life and system reliability.

Connector Handling

Connectors are an essential part of system reliability. They should be properly maintained and cared for to ensure long life and reliability. It is recommended to follow these steps to help prevent damage and increase the life of connectors.

- Always put the cap back on the tether bulkhead when the tether is disconnected.
- Always inspect the end of the connector prior to engaging.
- Never plug in a dirty or damaged connector.
- Visually align keyways or locating pins prior to engaging the connector.
- Always fully engage or tighten the connector.
- Secure locking collars finger tight.
- Install dummy plugs on unused connectors.
- Disconnect by pulling straight, not on an angle.
- Do not pull on the cable to disengage the connector.

IMPORTANT: Never “Hot Plug” any connector, this will result in internal damage to the electronics. Power down the system prior to connecting the inspection system tether.

Note: Never use WD-40 or similar solvent-based fluids on connectors or crawlers. These will cause the rubber parts of the connector or crawler to soften and swell rendering them inoperable.

SubConn Connector: Lubrication and Cleaning

- Periodically apply Molykote 111 silicone grease or equivalent before mating connectors.
- For dry mate connections, a layer of grease corresponding to 1/10 the socket depth should be applied to the female connector.
- After greasing, fully mate the male and female connector and remove excess grease from the connector joint.
- General cleaning and removal of sand or mud on a connector should be performed using a spray-based contact cleaner like isopropyl alcohol.

Impulse Connector: Lubrication and Cleaning

- Lubricate mating surfaces regularly with 3M Silicone spray or equivalent, DO NOT GREASE
- Lubricate O-rings with Molykote 111 or equivalent.
- Use dust caps to protect connectors wherever possible.
- Clean connectors with soap and fresh water, rinse out with alcohol and allow connector to air dry before using.

Vehicle Configuration

Camera Mounting

The Magg™ 310 camera can be mounted in a standard configuration or can be removed from the vehicle and mounted on an accessory pole. The camera can also be mounted in an alternate orientation option.

Standard Mounting

To install the camera onto the vehicle, do the following (removal is the reverse of installation):

1. Make sure the starboard axle screw is fully disengaged (tip should be slightly recessed in round housing).
2. Slide the camera between the chassis fairings, make sure the connector is oriented as shown and the washer is located with the locking nut on the outside of the fairing (see below).
3. Making sure the connector stem is seated all the way down in the port fairing slot, tighten the axle screw; make sure it cleanly enters the bronze bushing in the camera head.
4. Tighten the port side locking nut.
5. Connect the camera whip to the bulkhead connector.

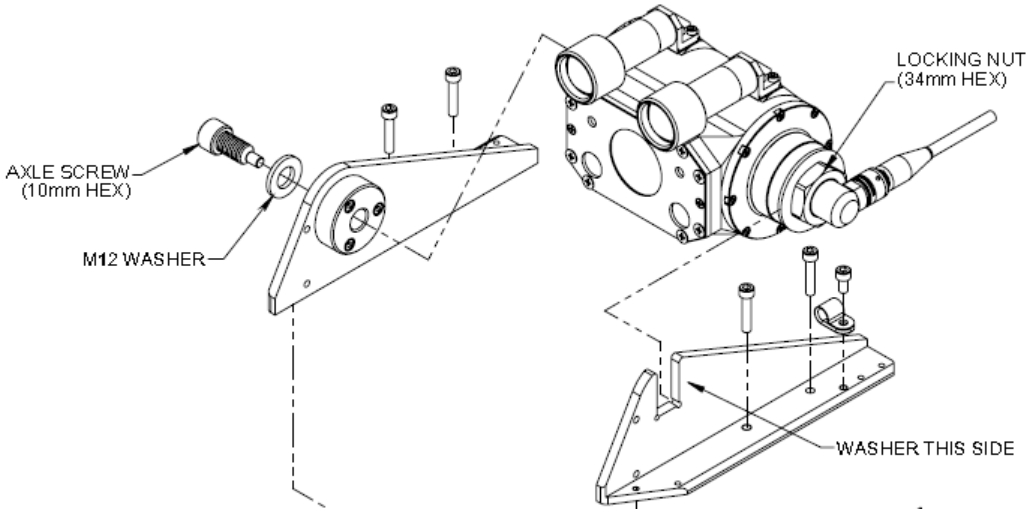

Pole Mounting

Mounting the camera onto the optional inspection pole is nearly identical to the standard installation (see below).

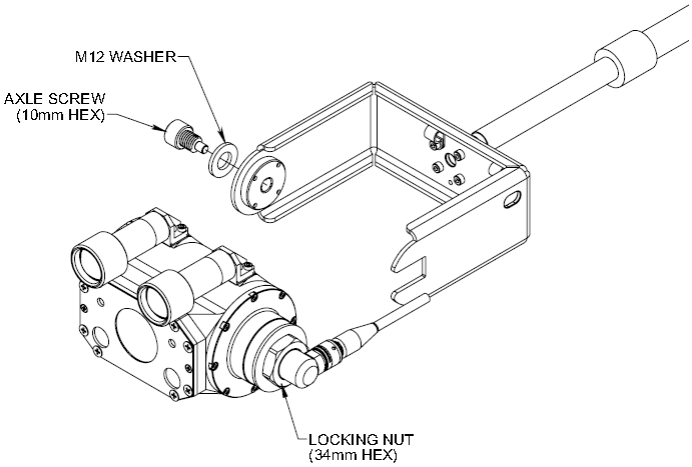

Alternate Mounting

Mounting the camera onto the optional mount is as follows (removal is the reverse of installation):

1. Remove one magnet cup M5 x 30 mm SHCS from each side of the vehicle as shown below.
2. Install the optional mount with 2x M5 x 30 mm SHCS and 4x M4 x 12 mm SHCS as shown.
3. Install the camera onto the mount, making sure to fully seat the connector stem into its mounting slot and tighten the lock nut.

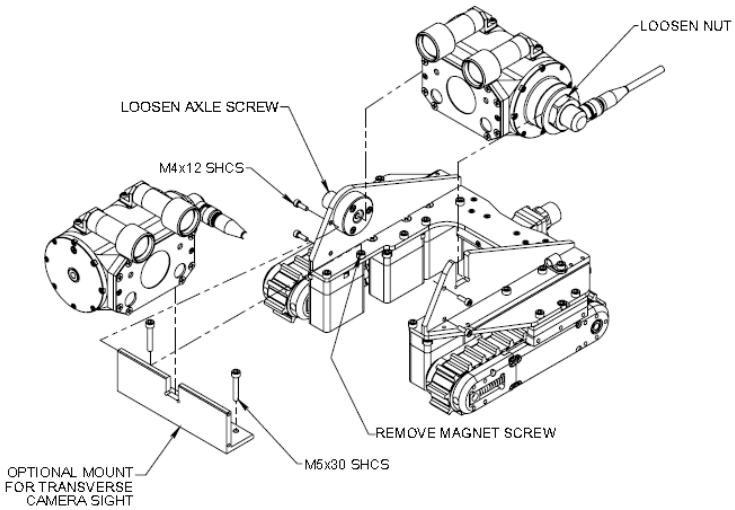

Actuator Configuration

The Magg™ 310 has the option to come with a center mounted actuator, primarily used with auxiliary probes. If an actuator module is purchased with the system, the spare harness whip will already be terminated.

If an actuator module is purchased separately, use the following instructions for installation:

1. Remove P-clamps from harness whip.
2. Attach whip to actuator bulkhead connector.
3. Ensure that the locking collar is fully tightened.

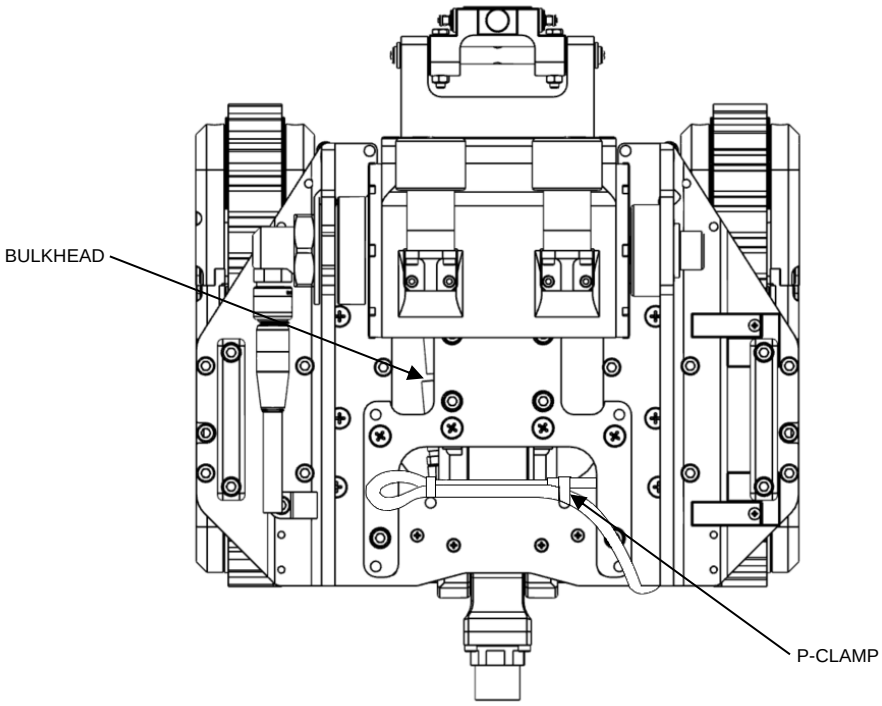

Magnet Spacing

The Magg™ 310 vehicle comes equipped with magnet cups to enable the vehicle to maneuver on a vertical or inverted magnetically attractive surface. The magnet cups utilize rare earth permanent magnets and cannot be disabled (or turned off).

The inspection surface must be carbon steel or alloy steel that has good magnetic properties. Most structural steels are strongly magnetic. 300 series stainless steels and some other alloys are not. The client may be able to identify their metal and look up its properties or test it with a magnet.

It is important to note that the magnet cups lose magnetic adhesion as they move away from the attractive surface. The operator needs to pay attention to distance between the magnet cups and the surface. If the magnets are too close to the surface, the Microtracs™ may not be able to overcome the added friction for skid steering. If the magnets are too far away the vehicle may lose magnetic adhesion. The distance from the magnet cups to the inspection surface can be adjusted by the operator by adding or removing the magnet spacers. The thickness of the steel surface also affects the amount of magnetic adhesion provided by the magnets.

Some considerations when determining magnet spacing:

- Thickness of stainless, plastic, or concrete cladding over the carbon steel surface.
- Uneven surfaces such as large welds.
- Thickness of magnetically attractive surface (0.20in minimum is ideal).
- Curvature of inspection surface.

Magnet Spacing

The Magg™ 310 vehicle comes with the tracks spaced down from the main chassis plate using four groups of 8mm and 4.5mm spacers (two groups per track). The vehicle comes with a kit of spacers to accommodate a wide range of track spacing.

Use the following mounting hardware depending on the track spacers used:

- When spacing the tracks between 6-12 mm (0.25-0.5 in), use M5x20 SHCS outboard and M5x25 SHCS inboard.
- For spacing less than 6 mm (0.25 in), use M5x14 SHCS outboard and M5x18 SHCS inboard.
- When spacing the tracks more than 12 mm (0.50 in), use M5x25 SHCS outboard and M5x30 SHCS inboard.

When remounting the tracks, make sure the whips are securely connected and the locking collars are fully engaged. Be careful to not pinch the track whips, and route them upwards towards the top of the rear crossbar.

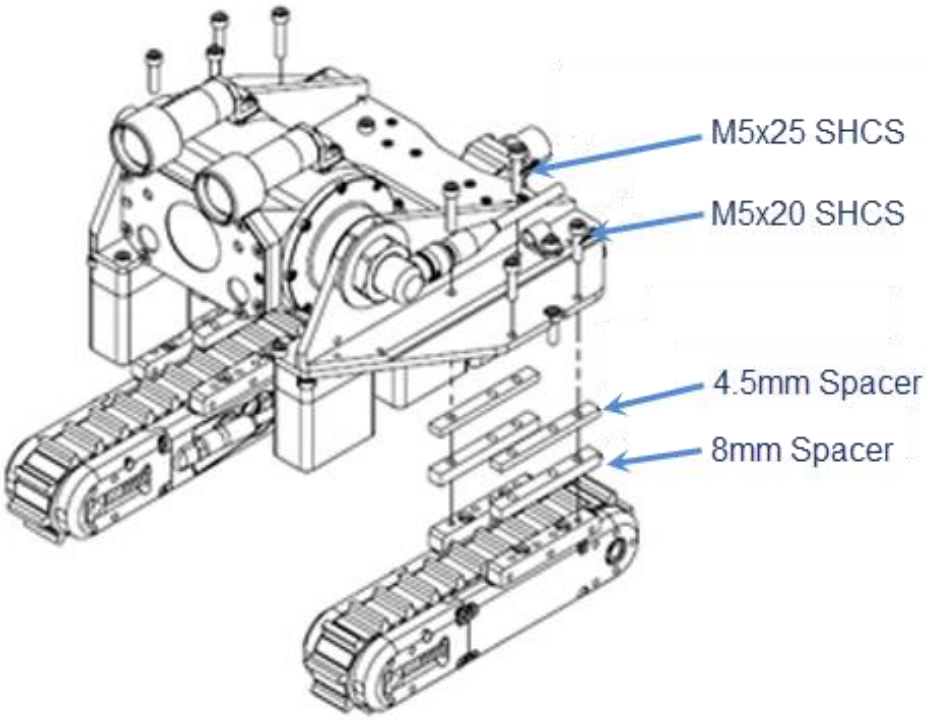

Fall Arrest

IMPORTANT: A lifeline or fall arrest system should always be used when vehicle detachment from the working surface threatens injury to personnel or damage to equipment. A fall arrest system can be attached to the vehicle on either or both chassis handles.

Additionally, one of the handles may be relocated using the two mounting holes located behind the camera.

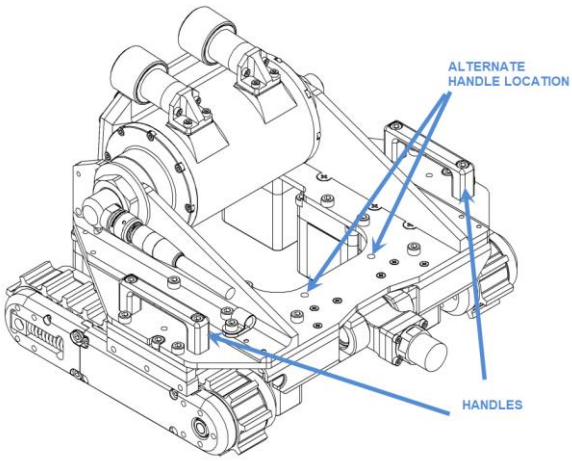

Operation

Pre-Operations Check

Before each deployment of the Magg™ 310 system, ensure everything is completed on the following checklist.

- ❑ Check that the work area has been safely set up.
- ❑ Fall arrest is in place for vertical or inverted use.
- ❑ Check that the line voltage available at the worksite matches the equipment setup.
- ❑ Check that power and deck cable connections are correct.
- ❑ Check the vehicle for the following:
  - ❍ Check that the vehicle is in the correct configuration for the deployment.
  - ❍ Check the vehicle for mechanical damage to the chassis or cable harnesses which could affect its operation.
  - ❍ Ensure that all fasteners are in place and secure. In particular, check the fasteners holding on cameras, lights, tracks, and the harness block.
  - ❍ Visually inspect the vehicle and Microtracs™ to ensure that the moving parts are free of debris and functional. Make sure the track belt is free of debris and turns freely.
  - ❍ Check the tether and vehicle whips for damage.
  - ❍ Ensure camera, light, and laser ports are clean.
- ❑ Check the reel for the following:
  - ❍ Check that nothing will block movement of the level wind shuttle.
  - ❍ Check that the tether has no loose, dangling coils. Dangling coils can propagate as the drum rotates and have the potential to jump the drum. Take care of these before deploying the tether.
- ❑ Power up the system and check the following:
  - ❍ Check for sufficient SSD drive space for recording.
  - ❍ Check record directories are set.
  - ❍ Test video recording.
  - ❍ Test laser lines
  - ❍ Test auxiliary lights.
  - ❍ Test track control.
  - ❍ Test camera control.

Post-Operations Check

A Post-Ops inspection should be carried out after every deployment using the following checklist:

- ❑ Inspect the tether for damage as it is reeled in.
- ❑ Visually inspect vehicle for entrained debris or mechanical damage.
- ❑ Test each function to ensure proper operation.
- ❑ Clean the system by hosing it down with water at regular line pressure. Do not pressure wash. The tracks may be cleaned off by hosing them down while running. If the system has been used in salt water, thoroughly rinse the vehicle with fresh water right away.
- ❑ Take time to pack the system properly for transport away from the worksite.
- ❑ Store the system in a dry environment.

Note: Ensuring the Magg™ 310 system is always stored in good working condition will minimize deployment time for future inspections.

ICON™ Software

Vehicle control, video recording and export are accomplished using ICON graphical interface controller software. The manual for ICON is integrated into the software or available in PDF format on the control computer's desktop.

- ICON Manual – Accessed through ICON or Desktop Shortcut.

Driving the Vehicle

When driving the vehicle, the operator should always be conscious of things that could cause the vehicle to disengage from the driving surface, either by drastically increasing magnet gap or overcoming the magnetic force entirely. These include the following:

- Welds or obstacles that are too large for the vehicle.
- Inward bulges or curves that increase magnet distance.
- Sheathing or coatings that increase magnet distance.
- Tensioning the tether at a large angle from the driving surface (approaching perpendicularity).

Always try to minimize the above risks to avoid system damage.

Maintenance

Galvanic Corrosion Control

Eddyfi Technologies strongly recommends cathodic protection whenever the Magg™ 310 is being deployed in a saltwater environment – either submerged or in salt spray.

Eddyfi Technologies' vehicles are designed to use **aluminum** marine anodes. Aluminum anodes are common in the marine industry and are replacing zinc anodes in many areas. For vehicle systems that are often pulled in and out of the water, aluminum anodes are especially important, as zinc anodes tend to scale over when exposed to air and may not reactivate when submerged again. An aluminum anode will always reactivate.

If the vehicle is being carried by a transport device, for example, a larger ROV, we recommend it also be protected by **aluminum** anodes or the two vehicles be electrically isolated from one another. Do not mix anode types (zinc and aluminum) on the assembly, between vehicles or between structures. There must be only one anode type throughout. Magnesium anodes must never be used with Eddyfi Technologies equipment.

Anodes are installed onto the Magg™ 310 as illustrated below using never seize on the screw rather than Loctite. Contact your sales representative for anode replacements.

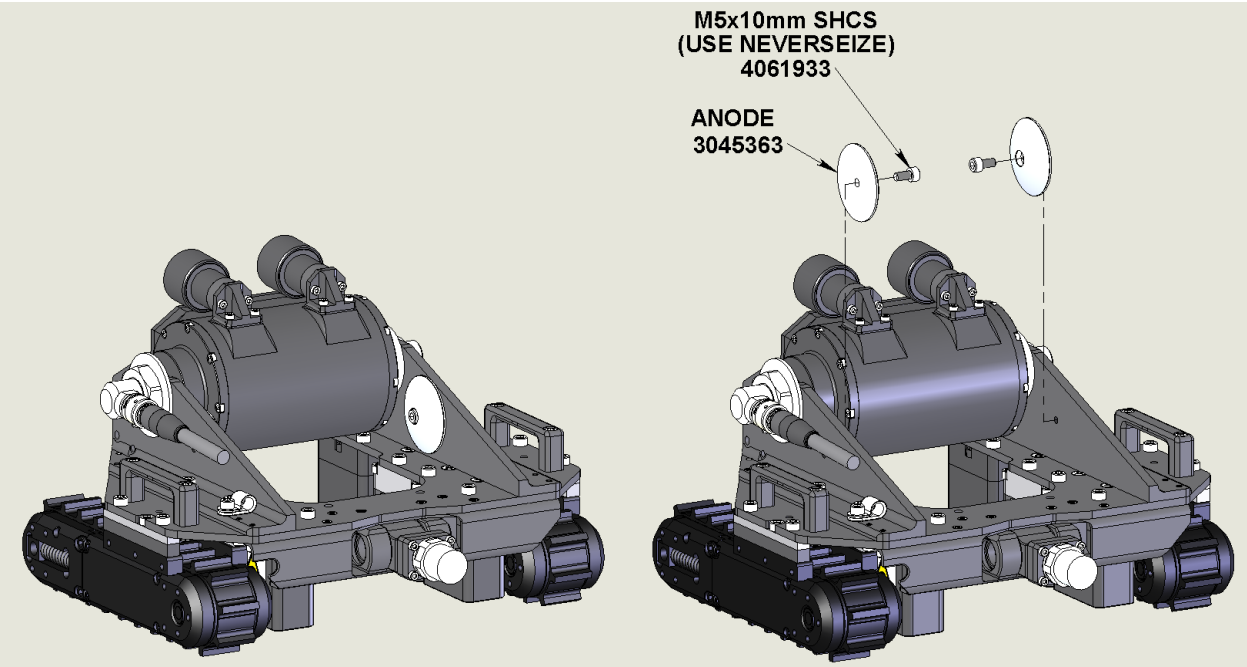

Rinsing and Cleaning

After every mission check to see if the vehicle needs cleaning.

1. If the system has been used in salt water, thoroughly rinse the vehicle with fresh water prior to being stored away. Accelerated corrosion will result if the inspection system is not rinsed properly. Pay close attention to rinsing and cleaning the camera window, LED light dome and the spaces between moving parts and track belts.
2. Use an open hose or tap at regular water line pressure for rinsing. Do not pressure wash the equipment – water will be forced into the camera at these high pressures.
3. Avoid scratching the camera port. Use glass cleaner and a soft cloth to clean the port.

CAUTION: Do not use a pressure washer to clean the vehicle or system components. Very high-pressure water can push past seals and flood the components resulting in electrical damage or personal injuries.

Periodically:

1. Use a damp cloth or spray cleaner for the power supply / controller box. The box must never be sprayed down or immersed in water. Unplug the controller before cleaning.
2. For general cleaning of the cameras and tracks, use a mild detergent.

Fuse Replacement

The controller and power supply contain panel mount fuses for both AC and DC voltages. These fuses are for the safety of the operator(s) as well as to protect the equipment from damage. If a fuse blows, stop and look for possible causes. Causes might include cable damage, water incursion or improper connections. *See the controller manual for fuse replacement.*

Fuse values have been carefully selected for their application. Always replace the fuses with the same type and rating.

Caution: Disconnect the power source before checking or replacing fuses.

Microtrac™ Maintenance

Refer to the Microtrac manual for Microtrac™ 4000 maintenance and servicing instructions.

Tether Re-termination

Tether termination is a specialized service beyond the scope of this manual. Contact Eddyfi Technologies if the tether is damaged or requires re-termination.

Troubleshooting

Camera Control Problems

1. Not all the auxiliary lights are on.
   - The ICON™ software allows the lights to be controlled independently. Ensure all lights are enabled. Refer to the ICON interface manual.
   - Inspect for blown LEDs.
2. Camera tilt does not function in one or both directions.
   - Check that the camera is not jammed.
   - If you can hear a motor running but see no movement, there is a mechanical or clutch problem inside the camera. Contact us.
3. Camera is moving very slowly.
   - Check the tilt speed in the camera control window. Refer to the ICON user interface manual.

Video Issues

1. No video (black or blue background).
   - Interface box is not turned on.
   - Video cables are not hooked up between interface box and computer.
   - Camera connector on vehicle is loose (turn power off first before plugging in camera).
   - Check monitor input settings.
   - Vehicle power is not on.
   - Check for problems with other video components between the computer and monitor.
   - Try a different monitor.
2. Picture is very dark or very bright.
   - Check the light levels of both the camera and main lights.
3. Intermittent picture.
   - Check and replace the video cables. Faulty video cables are common.
   - Check the monitor is working properly.
   - Check that the camera harness whip is fully plugged in.
   - Check for intermittent breaks in the camera harness cable.
   - Check the tether connectors at both controller and vehicle.
   - Check for tether or slip ring damage by testing tether continuity.
4. Picture is blurry, will not focus, or has poor color.
   - This may be a dirty camera view port, or a narrow object lying in front of the view port.
   - Object may be too close to the camera.

Vehicle Issues

1. Vehicle will not steer, or vehicle runs backward.
   - Tracks set to the wrong positions.
   - Track reverse setting incorrect in control software.
   - Node ID conflict between one or more devices on the vehicle.
   - Magnets may be positioned too close to the steel surface.
2. Tracks will not run.
   - Magnets may be too close to the steel surface.
   - Check the track current feedback (See ICON™ manual)
     - If current is at 100% and the vehicle doesn't move, then the tracks may be jammed. They could be wedged on an object or jammed with sand. Try reversing the tracks to clear debris. If a jam won't clear you will have to recover the vehicle by pulling it out with the tether.
     - If no current is registered, then power or communication is not getting to the tracks. Check all the cable connections.
   - Try power cycling the system.
   - Inspect the vehicle wiring for damage.
   - Check all the system connectors.
   - Try restarting ICON.
   - Listen for the track motors. If the motors run but the track doesn't turn, there is a problem with the gearing or shaft pins.
   - Try changing tracks and update serial number configuration (ICON will require a restart).

Tether Reel Issues

1. Tether distance does not read correctly.
   - Check that the pressure wheel is pressing the tether against the payout sheave. If the tether is being pulled up from the sheave instead of down, it may be disengaged from the sheave.
   - Check that the units are set properly in the graphical overlay.
   - Recalibrate distance encoder.
   - Ensure that the correct COM port is selected in the control software.
2. Intermittent problems with vehicle or camera, only when reel is turning.
   - Slip ring may be damaged. Use a multi-meter to check continuity of the tether with reel drum turning.

Parts and Repairs

Ordering Parts/Customer Service

Spare and/or replacement parts are available for your product and can be ordered directly from your local office.

When ordering parts always make sure to quote the sales order acknowledgement (SOA) number and/or the serial number of the system component in question.

Eddyfi Robotics Inc. (Canadian Headquarters and Manufacturing Location)
2569 Kenworth Road, Suite C
Nanaimo, BC, V9T 3M4
CANADA
TF 1.877.468.5886
T +1.250.729.8080
info@eddyfi.com
www.eddyfitechnologies.com

Eddyfi Technologies – US (American Authorized Distributor and Service Centre)
812 W 13th Street
Deer Park, TX, 77536
USA
T +1.281.542.3292
info@eddyfi.com
www.eddyfitechnologies.com

Warranty Repairs

Warranty conditions are specified in the Warranty section. Should any conditions of the manufacturer's warranty be breached, the warranty may be considered void. All returned items must be sent prepaid to Eddyfi Technologies at the above address.

Factory Returns to Canada

Some sub-assemblies of your Eddyfi Technologies product are not field-serviceable and may need to return to the factory for repair. Warranty claims must return to the factory for evaluation.

To return an item for evaluation or repair, first contact Eddyfi Technologies at our toll-free number or e-mail address. Eddyfi Technologies will supply a Return Merchandise Authorization (RMA) number with detailed shipping and customs instructions. Items shipped without an RMA number will be held at Eddyfi Technologies until the correct paperwork is completed. If cross-border shipments are not labelled as per the instructions, the items may be held by customs and issued additional fees.

All returned items must be sent prepaid unless other specific arrangements have been made.

When the product or system is being shipped anywhere by courier or shipping company, it must be packaged in the original packaging it was received in. This measure greatly reduces the consequences of rough handling and subsequent shipping damage.

Eddyfi Technologies cannot be held responsible for damages due to improper packaging. Shipping damage may have significant impact on repair turnaround times.

Product/System Drawing Package Availability

Mechanical assembly and electrical wiring diagram drawing packages for your equipment are available in PDF format upon request. Printed copies may also be purchased from Eddyfi Technologies. Contact your local sales contact for more information.

Limited Warranty Policy

Refer the Eddyfi Technologies website for warranty terms for this product.
https://www.eddyfi.com/en/salesterms