Eddyfi Robotics Inc.
2569 Kenworth Road, Suite C
Nanaimo, BC, V9T 3M4
CANADA

+1.250.729.8080
info@eddyfitechnologies.com
www.eddyfitechnologies.com

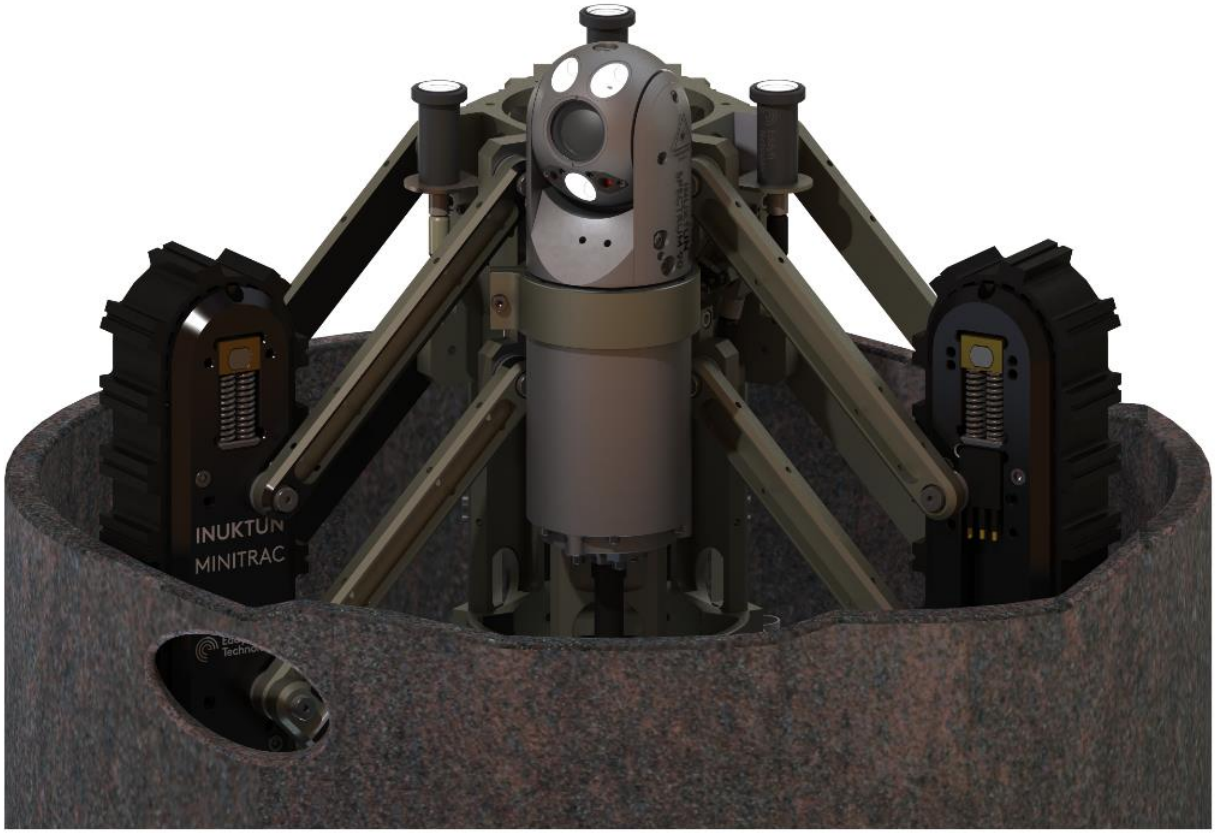

TRITRAX™ 380 PIPE INSPECTION CRAWLER

Table of Contents

About This Manual 5
System Description 5
Specifications 6
Certification 6
Safety 7
System Setup 9
Personnel Requirements 9
Working and Storage Environment 9
System Power 10
Power Requirements 10
Set the Line Voltage 10
Generators / Inverters 11
Connections 11
Pre-Configured Control Rack 11
Control System Connections – SD Video 12
Control System Connections – HD Video 12
Client Configured Rack 13
Vehicle and Tether 14
Winch Installation 15
Portable Reel Setup 15
Tether Handling 16
Connector Handling 16
SubConn Connector: Lubrication and Cleaning 17
Impulse Connector: Lubrication and Cleaning 17
Vehicle Configuration 18
Spectrum™ 90 PTZ Camera Installation 18
Pipe Size Configuration 19

Minitrac™ Configuration 20
Track Extensions 22
Probe Shuttle and Rotate Module 23
Rotate Module Installation 24
Probe Shuttle Installation 25
Adjustments for Large Pipe Sizes 26
R-Scan Probe Holder Assembly 26
R-Scan Installation 27
R-Scan Cable Routing 29
Operation 32
Pre-Operations Check 32
Post-Operations Check 33
Power-Up Sequence 33
Power Supply Operation 33
Ground Fault Detection & Alarms 34
ICON™ Software 35
ICON™ Control Panel 35
Vertical Operation 35
Vertical Crawler Expand Mechanism 36
Optional Rotate Module Control 38
Optional Shuttle Assembly Control 42
Video Channel Control 42
Dealing With Obstacles 44
Inspection Guidelines 44
Powered Winch Operation 44
Vehicle Recovery 45
Troubleshooting 45
Camera Control Problems 45
Video Problems 46
Vehicle Problems 46

Winch Problems 47
Maintenance 47
Galvanic Corrosion Control 47
Rinsing and Cleaning 48
Fuse Replacement 49
Minitrac™ Maintenance 49
Camera Maintenance 49
Tether Re-termination 49
Parts and Repairs 50
Ordering Parts/Customer Service 50
Warranty Repairs 51
Factory Returns to Canada 51
Product/System Drawing Package Availability 51
Limited Warranty Policy 51

About This Manual

This manual has been prepared to assist you in the operation and maintenance of your Eddyfi Technologies equipment. Correct and prudent operation rests with the operator who must thoroughly understand the operation, maintenance, service and job requirements. The specifications and information in this manual are current at the time of printing.

This product is continually being updated and improved. Therefore, this manual is meant to explain and define the functionality of the product. Furthermore, schematics or pictorials and detailed functionality may differ slightly from what is described in this manual.

Eddyfi Technologies reserves the right to change and/or amend these specifications at any time without notice. Customers will be notified of any changes to their equipment.

Information in this manual does not necessarily replace specific regulations, codes, standards, or requirements of others such as government regulations.

This manual is copyright © 2021 by Eddyfi Robotics Inc. All rights reserved.

System Description

The TriTrax™ 380 Pipe Inspection Crawler system is a Minitrac™ based vehicle used for navigating pipelines ranging from 380 – 915 mm (15 – 36 in) internal diameter. A minimized vehicle profile provides maximum clearance for passage of service intrusions in the pipe.

The inspection system has been manufactured with the hazards and demands of pipe inspection in mind.

All TriTrax™ hardware can be used dry, underwater, or in dirty, muddy conditions. The rugged design ensures a long service life and helps protect the vehicle from damage during normal use.

Typical applications include inspection of:

- Sewer and storm drains
- Hydroelectric pipe and infrastructure
- Steam headers
- Tanks and pressure vessels
- Oil and gas refineries and pipelines
- Pulp and paper mills

Specifications

Minimum Vehicle Dimensions			Ø381 x 848 mm (Ø15 x 33.4 in)
Vehicle Weight			46 kg (102 lb.) – standard vehicle 68 kg (150 lb.) – with optional Rotate and Shuttle Assembly
Depth Rating			60 m (200 ft)
Pipe Size Range	Standard		380 – 660 mm (15 – 26 in)
	w/ Extensions		560 – 915 mm (22 – 36 in)
Maximum Payload			11 kg (25 lb.)
Maximum Tether Length[2]			1,000 m (3,300 ft)
Tracks			3x 8000 Series Minitracs™
Camera	Front	Standard	Spectrum™ 90 PTZ
		Option	Spectrum™ 120 PTZ
	Rear		Sapphire™
Lights			3x 801 Lights
Reel	Standard		Portable tether reel with payout encoder
	Option		High-capacity powered winch
Power Requirements[3]			100 – 240 VAC 50/60Hz, 1.9 – 3.1 kW
Operating Temperature			0 – 50 ºC (32 – 122 ºF)
Storage Temperature			-20° – 60 ºC (-4 –140 ºF)

[1] Weights may vary depending on optional components.
[2] Actual travel distance may be decreased depending on inspection geometry (traction and number of bends).
[3] Maximum power requirements depend on tether reel option.

Certification

The TriTrax™ 380 system is built in accordance with the Low Voltage Directive 2006/95/EC, Machinery Directive 2006/42/EC, and Electromagnetic Compatibility Directive 2004/108/EC.

CE

Safety

In order to be able to use this product properly and safely, every user must first read these operating instructions and observe the safety instructions contained therein. Take care of these operating instructions and keep them in a place where they can be accessed by everyone. Untrained personnel should not handle or operate this equipment.

CAUTION: Failure to follow these safety instructions may result in injury or equipment damage.

This system includes some specific devices that have their own User Manuals. Instructions on those manuals must be also read before using the system.

WARNING: High Voltage 180 – 400 VDC. If the equipment is powered from a source other than an Eddyfi Technologies provided controller, the power supplied to the product must have reinforced isolation from the mains with no reference to earth ground.

Note: We strongly recommend using gloves when handling the vehicle to reduce pinching hazard.

WARNING: Pinch Hazard – The vehicle's expand mechanism operates with enough force to crush or severe appendages. Always power down the system before handling the vehicle.

WARNING: Intense Optical Radiation - The Spectrum™ 90 camera lights and 801 auxiliary lights are extremely bright. Never look directly at the lights. Use a welding filter (shade #8 or higher) if inspecting the LEDs.

- **CAUTION: Class II Laser:** The optional Spectrum™ 90 may be equipped with laser lines. Do not intentionally stare into the beam. Typically, Class II relies on the blink reflex to limit exposure to no more than ¼-second. Intentionally staring into the beam can cause eye injury.

- When performing maintenance or functional checks of the lasers and camera lights, take precautions to protect nearby personnel from unintended exposure which could be temporarily blinding.
- Observe safe lifting practices. For storage and shipping, the TriTrax™ 380 system is packed in three parts: Controller, Vehicle, and Reel / Tether. Each of the three components is either built or

packed into a Pelican case with carrying handle. The heaviest case containing the tether and mini-reel is equipped with wheels and extending handle like a suitcase.

- Do not operate the system with damaged wires. A short circuit may damage the power system, telemetry system, cameras, or attached equipment. Exposed wires may also create a shock hazard.
- Disconnect the power source before servicing the product; otherwise, damage may result.
- Although designed for durability, the vehicle and its components or attached devices may suffer structural damage if dropped or impacted. A lifeline or fall arrest system should be used at all times when the vehicle is navigating on a vertical or inverted horizontal position. In addition, stepping on the tether may pull the vehicle off the wall causing it to fall and sustain physical damage.
- All personnel operating or maintaining this equipment must be trained and competent.
- Eddyfi Technologies equipment is used in many varied environments from hot/dry to confined spaces to deep underwater. Such diverse environment risks must be addressed by the operators who are trained to work in such surroundings. As such, the operator is responsible to determine safe site setup and appropriate personal protective equipment (PPE) for operation and maintenance of the equipment.

WARNING: Spark Hazard - Under no circumstances should this equipment be used in a potentially explosive atmosphere

WARNING: Trip Hazard - Never stand on the tether. A snap load to the tether may pull it out from underneath you and cause you to fall. Standing on the tether may also damage its internal conductors, cause unnecessary wear, and decrease its life. Stepping on the tether may also pull a magnetic vehicle off the wall.

WARNING: High Temperature - The camera head, auxiliary lights, and harness block may become hot during operation. Allow a cool-down period before handling.

WARNING: Mechanical Pinch Hazard – Rotating or moving components can draw fingers into a pinch position. Do not handle the vehicle while mobile parts are running, turn off power or disconnect the tether while reconfiguring or maintaining the vehicle.

System Setup

Personnel Requirements

Deployment of the TriTrax™ 380 system should be performed by two people.

- **Console Operator:** This person is responsible for driving the vehicle, watching the pipe and making comments about the location and pipe condition. It is also the operator's responsibility to assess whether a pipe is in the appropriate condition for safe passage of the vehicle or if there is a risk of getting stuck. The operator may also assist in general site setup (cones, warning signs, etc.), vehicle maintenance and configuration.

- **Deployment / Tether Handler / Field Maintenance:** This person has several tasks including:
  - Configuring the vehicle for the current pipe
  - Lowering the vehicle in and out of the manhole
  - Watching the tether as the vehicle enters and exits the pipe
  - Operating the reel and winding the tether during recovery

Establish a good channel of communication between the operator and deployment personnel. Good communication can avoid accidents, damage to the equipment, and promotes efficiency and productivity. In particular, the person deploying the vehicle and watching the tether must be able to quickly tell the operator to stop the vehicle if something goes wrong. The operator should never turn on power or initiate movement without first communicating with the vehicle handler.

Working and Storage Environment

The control system (interface box, power supply, and Control computer) is to be used in a **dry, covered** environment only. These components are not waterproof. Keep all cords and cables away from water.

The **tether and vehicle** are depth rated to 60 m (200 ft) of water. The tether connector is a wet-mate type which may be wet when plugged in but cannot be plugged in underwater. Keep the tether connector capped with a dummy plug when not connected to the vehicle to help keep out dirt. The tracks are tolerant to sandy and muddy conditions, although this decreases seal life. The vehicle may also be operated in dry or dusty environments.

The portable reel and winch are splash resistant only. Refer to the reel manual.

To maximize component life and minimize deployment time it is recommended that the vehicle and tether be cleaned after use and the entire system stored in a dry, dust free, location.

System **storage temperatures** are between -20 ˚C – 60 ˚C (-4 ˚F – 140 ˚F)

System Power

Power Requirements

The power requirements given below are maximums for a fully configured system with cable reel. For use with 115 VAC sources, a fully configured TriTrax™ 380 system requires three independent standard 15 A circuits for power, or one 20 A and one 15 A circuits as follows.

<table>
<tr><th></th><th>Power</th><th colspan="2">Circuit</th></tr>
<tr><td>Control Computer</td><td>400W</td><td rowspan="2">115 VAC @ 15 A</td><td rowspan="3">115 VAC @ 20 A</td></tr>
<tr><td>Monitor</td><td>25W</td></tr>
<tr><td>Power Supply / Interface Box</td><td>1200W</td><td>115 VAC @ 15 A</td></tr>
<tr><td>Powered Winch</td><td>1200W</td><td>115 VAC @ 15 A</td><td>115 VAC @ 15 A</td></tr>
<tr><td>System Total</td><td colspan="3">2825 W</td></tr>
</table>

Set the Line Voltage

Before powering on the TriTrax™ 380 system, it is important to check that the input voltage settings are correct - an incorrect voltage setting will damage the system power supply and the winch controller. When installing the system in a new location always check the line voltage.

- **Monitor:** Universal - no action required.
- **Computer:** Universal - no action required.
- **Interface Box:** Universal - no action required.
- **Power Supply:** Set the line voltage switch to 115/230VAC and change fuse.
  - For 115 VAC use 15 A MDA type fuse.
  - For 230 VAC use 10 A MDA type fuse.
- **Winch:** Jumpers must be set inside the hand-held controller to switch between 115 VAC and 230 VAC. Refer to the winch manual for instructions.

WARNING: Line Voltage Select – Failing to select the proper line voltage on the power supply and winch will result in equipment damage.

Generators / Inverters

If powering the system from a generator or inverter, refer to that unit's operating manual for recommendations on continuous and peak load ratings. These power sources may apply a reduced output rating based on electrical load and environmental temperature. Remember to include the power needs of other connected devices (external monitors, recording devices, lighting, etc.) when selecting a generator or inverter.

Connections

Pre-Configured Control Rack

The monitor, computer, interface box and power supply are typically installed and connected in a shock-mount portable 19 in rack case. Systems pre-configured in a control rack will only need the tether, winch and vehicle connections to be made before operations.

See the Controller and Winch / Reel user manuals for detailed operation and interconnects.

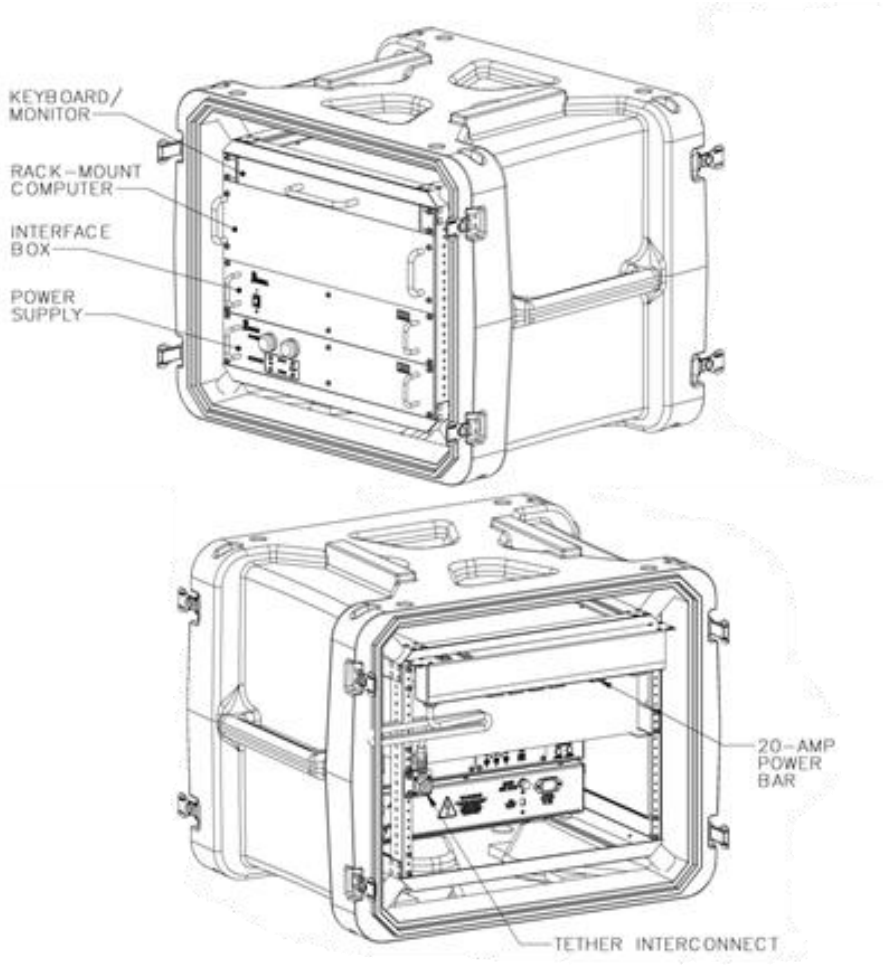

Control System Connections – SD Video

The ability to receive standard definition or high-definition video depends on the interface box used with the system. A standard definition interface box is depicted below which would be connected to the high voltage power supply.

1. Connect the power supply to the interface box using the supplied interface cable. Ensure the locking collars are screwed on all the way.
2. Connect the USB comms to the control computer.
3. Using equipment power cords connect the power supply and interface box to the 20-Amp power bar supplied with the equipment rack. Note that the power bar will only accept equipment power cords. The input cord on the power bar can be changed depending on the input voltage and location.
4. Connect the tether (or deck cable from the winch or reel) to the interface box as illustrated below.
5. Connect the front monitor or video capture to channels A, B or C (three-way splitter) and the rear monitor or video capture to channel D, E or F. These are the default output, but the connector assignments are also software configurable.

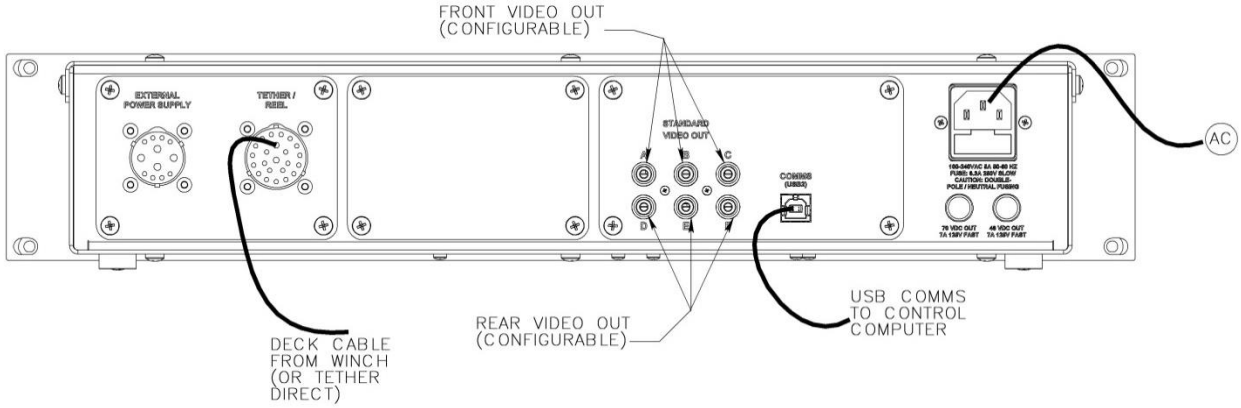

Control System Connections – HD Video

A high-definition interface box is depicted below which would be connected to the high voltage power supply. For an HD system make the following connections:

1. Connect the power supply to the interface box using the supplied interface cable. Ensure the locking collars are screwed on all the way.
2. Connect the USB2 comms to the control computer.
3. Using equipment power cords connect the power supply and interface box to the 20-Amp power bar supplied with the equipment rack. Note that the power bar will only accept equipment power cords. The input cord on the power bar can be changed depending on the input voltage and location.
4. Connect the tether (or deck cable from the winch or reel) to the interface box as illustrated below.
5. Different options may be present for SD video, depending on interface box model. If the interface box has an internal video capture card there will be two USB2 ports labelled Video A and Video B. These will be the front and rear standard definition cameras on the vehicle. Analog SD video is

available as normal through the RCA connectors. Use A, B, or C for front video (if this is an SD video system) and D, E or F for rear video. There are spare front and rear video outputs which can be connected to external monitors.

6. Options for HD video out include HD-SDI, USB3 (internal capture device) and component Pr-Y-Pb. These connectors are for the front high-definition camera. Spare connectors are active and may be connected to external monitors, capture cards or recording devices.

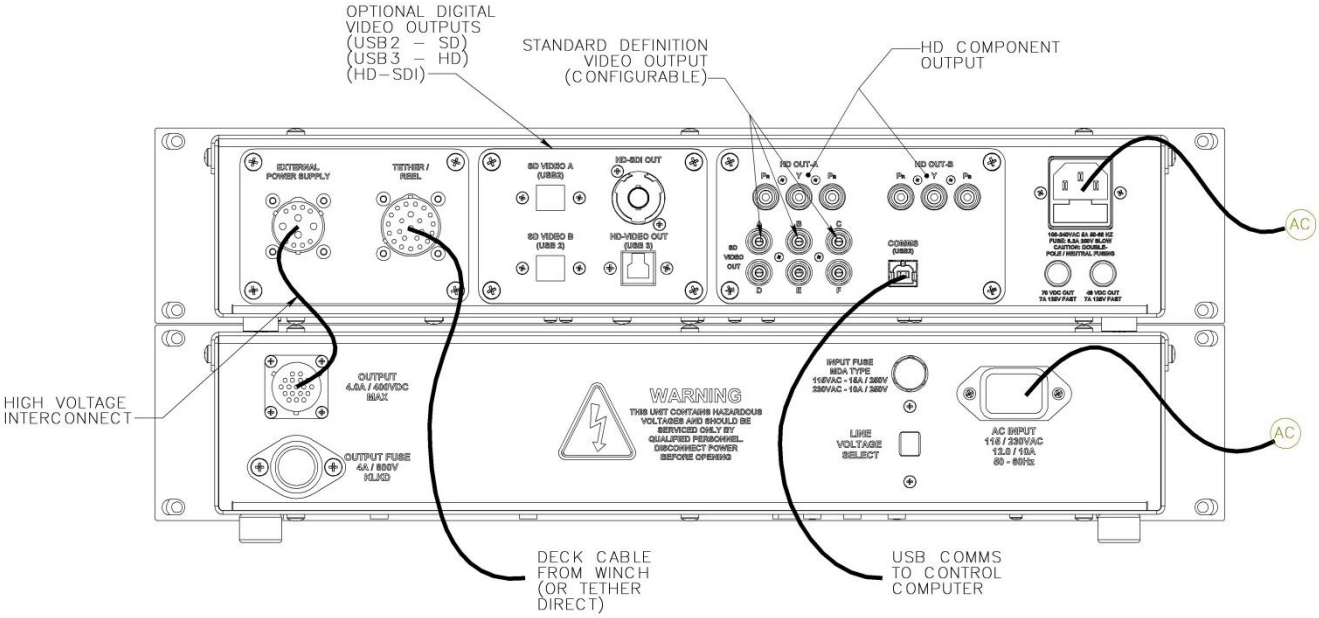

Client Configured Rack

If you are installing the power supply and interface box into your own 19 in rack installation, consideration must be given to adequate air flow for cooling the power supply. In any installation, ensure that the air inlet and outlet at the sides of the power supply are free of obstructions. The system could overheat if airflow is restricted. The front or back of the 19 in rack must also be open for air flow.

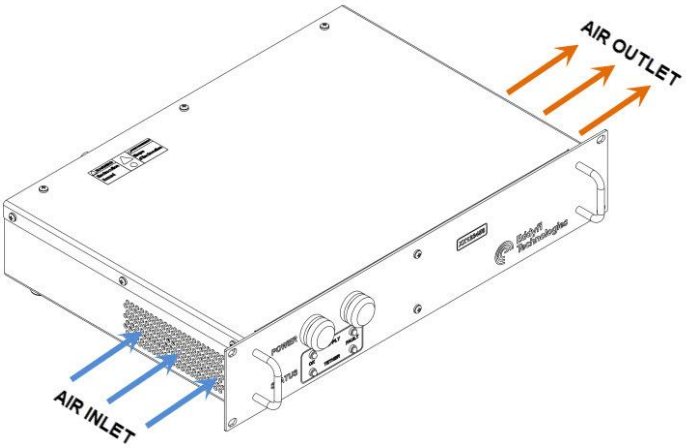

Vehicle and Tether

It is important that the tether be properly connected to the vehicle; otherwise, damage to the system may result.

1. Connect the vehicle end of tether to the back of the integrated harness block. Visually line up the key in the connector before mating. Fully screw down and hand tighten the locking collar.
2. Secure the tow cable to the cable grip on the tether using the quick link. Adjust the grip so that there is tether slack between the grip and the vehicle no matter which way the tether approaches the harness block from as illustrated below.
3. Verify all device whips from the harness block to their respective components are securely connected, and the whips are free from damage.
4. Ensure any unused connectors are capped with dummy plugs to insulate and protect their electrical contacts.

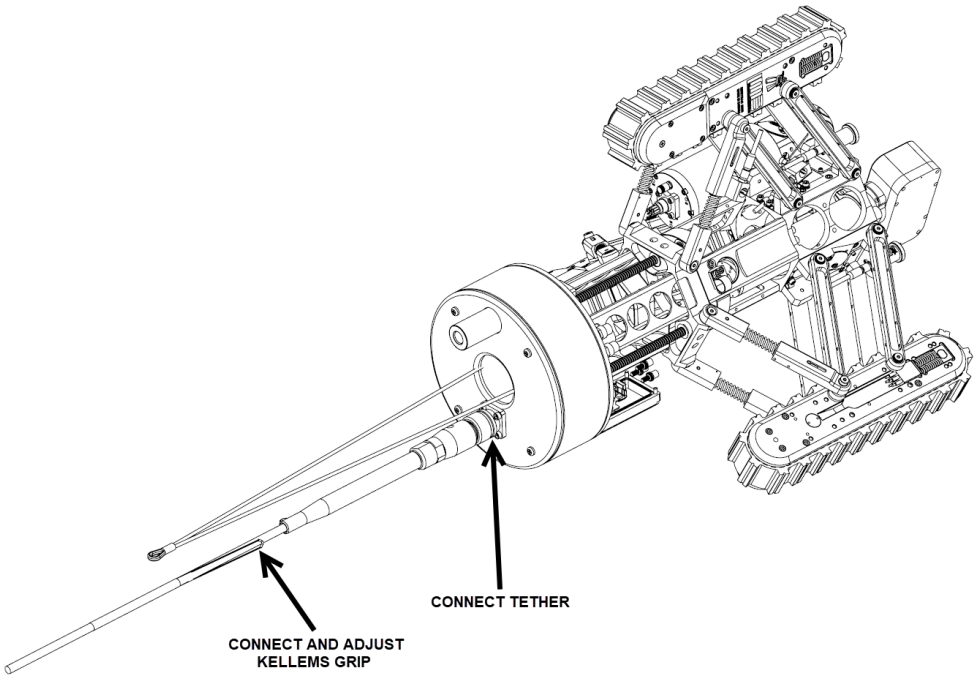

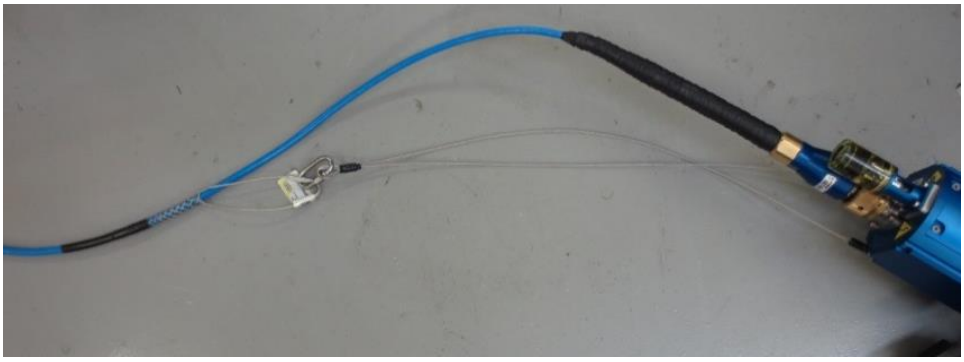

Winch Installation

If your system includes an AC powered winch refer to the winch manual for setup and installation instructions.

Portable Reel Setup

If your system includes a portable reel, follow these steps to operate:

1. Remove the shipping cap from the front of the case and insert the crank handle.
2. Connect the deck cable from the reel to the controller.
3. Disengage the packing brake (pull back and turn on the locking pin).
4. Make sure the friction brake is **engaged** - disengaging the friction brake can result in slack tether resulting in potentially jamming the reel.
5. Unwind some tether and connect the tether to the vehicle.
6. Run the tether through the level wind as follows:
    a. There is an access slot which must be opened by lifting on the two exposed screw heads to raise the tether support shafts.
    b. Pull up on both sides of the axle on the top wheel and slide the tether beneath it - failing to lift up on the wheel can scuff and damage the tether.
    c. Make sure that the two wheels that sandwich the tether top and bottom in the level wind are tracking properly as the tether is paid out - this tells the controller how much tether the reel has unwound and how far your vehicle has travelled.

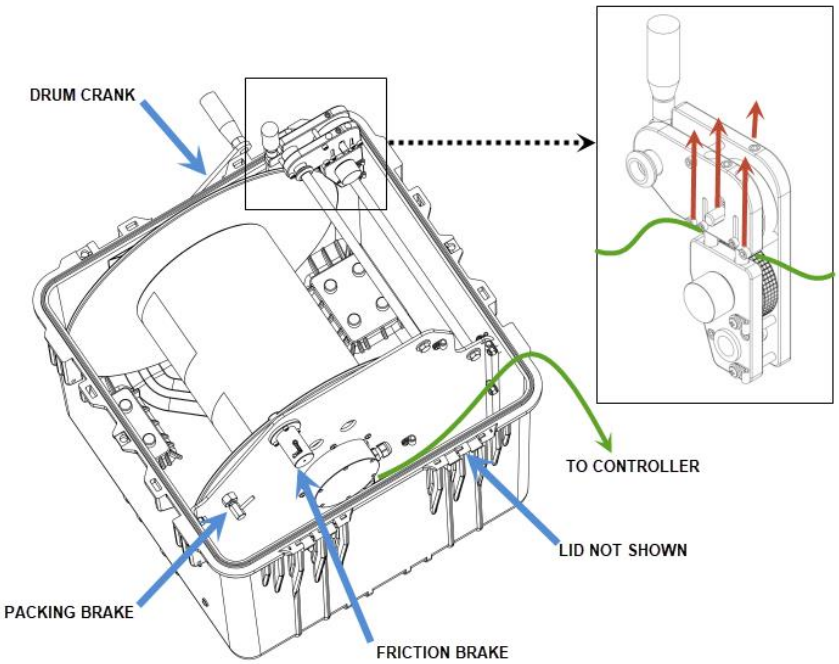

Tether Handling

The tether is one of the most important parts of the system. It feeds power and control signals to the system and returns data to the controller. If the tether is damaged from improper use, poor handling or an accident, the system may become inoperable. This could lead to significant downtime, loss of production, and avoidable costly repairs. It is encouraged to stress the importance of the tether and its use to anyone operating or maintaining the system. For maximum tether life and reliability, we recommend the following tether handling tips.

- Do not step on the tether
- Do not drive over the tether
- Do not bend the tether beyond its minimum bend radius
- Do not kink the tether
- Do not snap load the tether
- Avoid loading the tether whenever possible
- Always use the cable grip strain relief if applicable to your system
- Regularly inspect the tether for damage
- Regularly clean the tether

Note: Protecting the conductors inside the tether is critical to the life and operation of the tether. Proper tether handling and care will result in extended tether life and system reliability.

Connector Handling

Connectors are an essential part of system reliability. They should be properly maintained and cared for to ensure long life and reliability. It is recommended to follow these steps to help prevent damage and increase the life of connectors.

- Always put the cap back on the tether bulkhead when the tether is disconnected
- Always inspect the end of the connector prior to engaging
- Never plug in a dirty or damaged connector
- Visually align keyways or locating pins prior to engaging the connector
- Always fully engage or tighten the connector
- Secure locking collars finger tight
- Install dummy plugs on unused connectors
- Disconnect by pulling straight, not on an angle
- Do not pull on the cable to disengage the connector

IMPORTANT: Never “Hot Plug” any connector, this will result in internal damage to the electronics. Power down the system prior to connecting the inspection system tether.

Note: Never use WD-40 or similar solvent-based fluids on connectors or crawlers. These will cause the rubber parts of the connector or crawler to soften and swell rendering them inoperable.

SubConn Connector: Lubrication and Cleaning

- Periodically apply Molykote 111 silicone grease or equivalent before mating connectors
- For dry mate connections, a layer of grease corresponding to 1/10 the socket depth should be applied to the female connector
- After greasing, fully mate the male and female connector and remove excess grease from the connector joint
- General cleaning and removal of sand or mud on a connector should be performed using a spray-based contact cleaner like isopropyl alcohol

Impulse Connector: Lubrication and Cleaning

- Lubricate mating surfaces regularly with 3M Silicone spray or equivalent, DO NOT GREASE
- Lubricate O-rings with Molykote 111 or equivalent
- Use dust caps to protect connectors wherever possible
- Clean connectors with soap and fresh water, rinse out with alcohol and allow connector to air dry before using.

Vehicle Configuration

Spectrum™ 90 PTZ Camera Installation

The TriTrax™ 380 chassis can mount any Spectrum™ 90 camera. Installation is as follows:

1. **ALWAYS** turn off the system before working around the expand mechanism; pinch points may cause injury to fingers and hands.
2. Loosen the M5 x 14 mm SHCS on the camera mount ring.

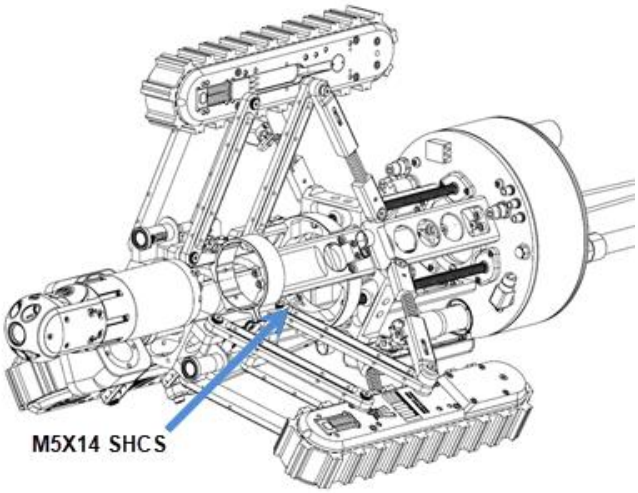

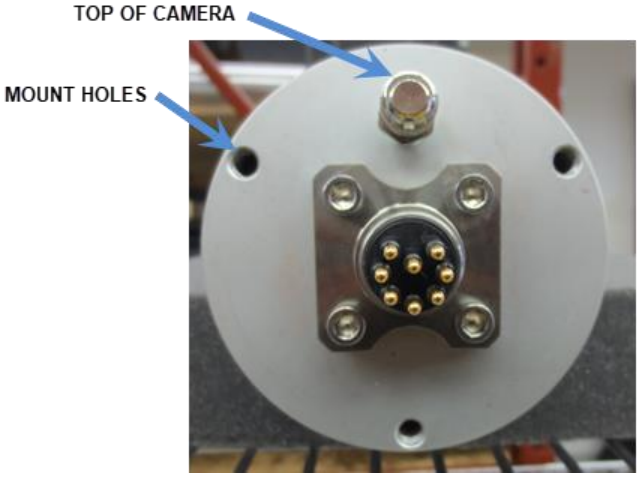

3. The purge valve indicates the top of the camera, as shown above. Mount the camera with the valve on top.
4. Slide the camera into the desired position from the front of the camera mount. Make sure not to clamp on the rotating section of the camera.
5. Tighten the mounting screw.

Pipe Size Configuration

The TriTrax™ 380 crawler can be configured for a wide range of pipe sizes depending on how the tracks are mounted and if track extensions are used. The table below provides pipe ranges depending on mounting options. See the following sub-sections on configuring the tracks and extension brackets.

Pipe Range	Notes	Illustration
380 – 560 mm (15 – 22 in)	Outer Minitrac™ mounts	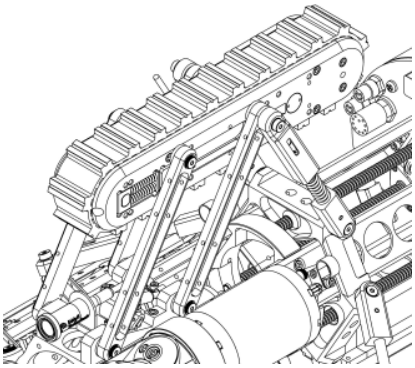
460 – 660 mm (18 – 26 in)	Inner Minitrac™ mounts	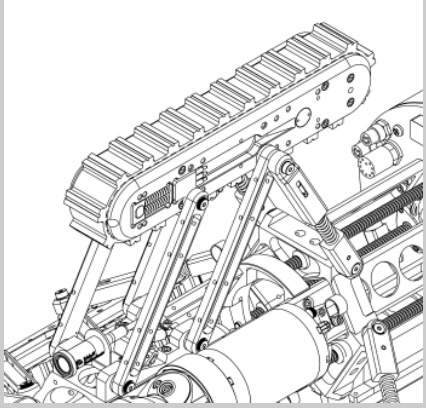
560 – 915 mm (22 – 36 in)	Extension Brackets	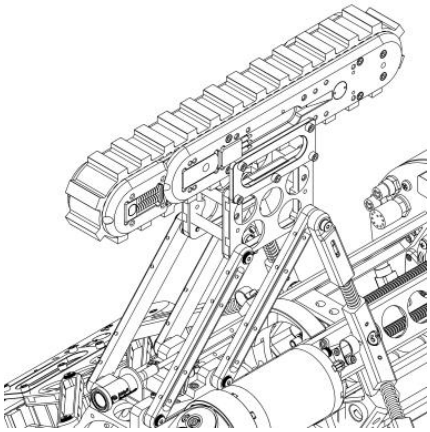

Minitrac™ Configuration

Use the following procedure is the preferred method for installing the Minitracs™ onto the TriTrax™ 380 chassis:

WARNING: High Voltage 180 – 400 VDC. Ensure that the system is powered down when connecting or disconnecting track whips. High voltage track whips carry can cause serious injury or death.

To uninstall or reconfigure the Minitracs™, do the following:

1. Disconnect the mating track connector.
2. Unscrew the shoulder bolts that mount the track to the expand linkages – *note the different bolt lengths and washer locations between the linkages and tracks.*
3. Remove the track.

Installation of the Minitracs™ *is opposite of removal – note the different locations for track mounting and make sure to lubricate the male connector on the track.*

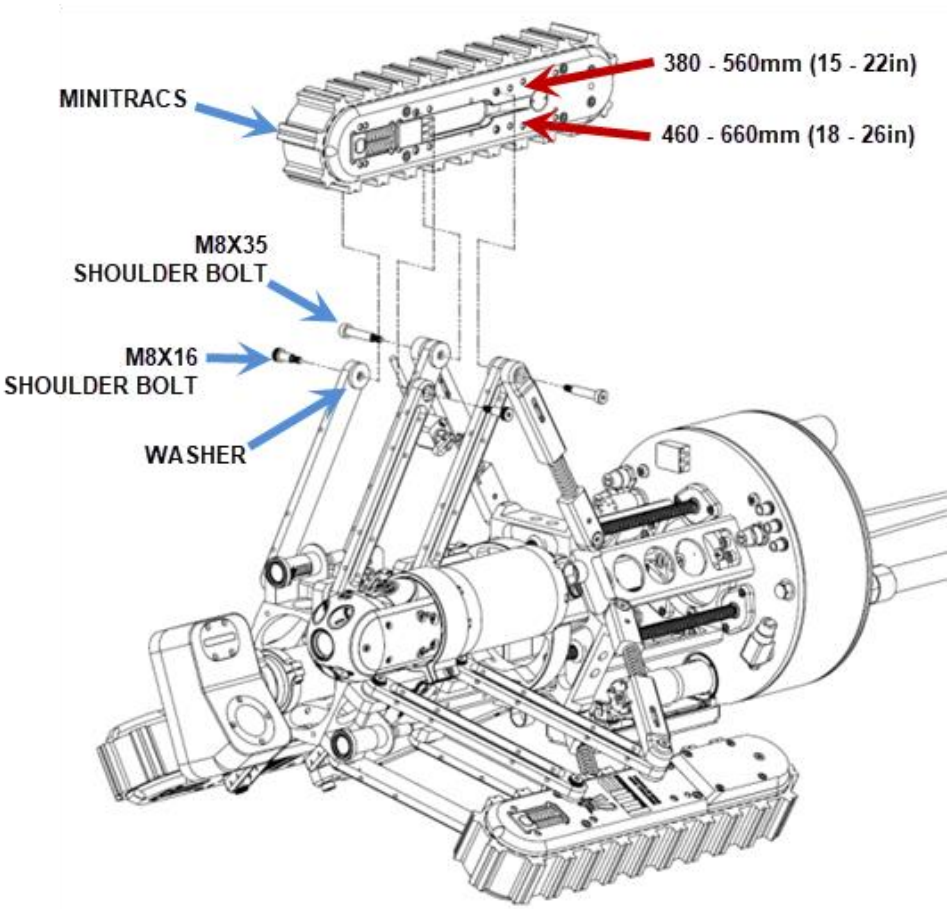

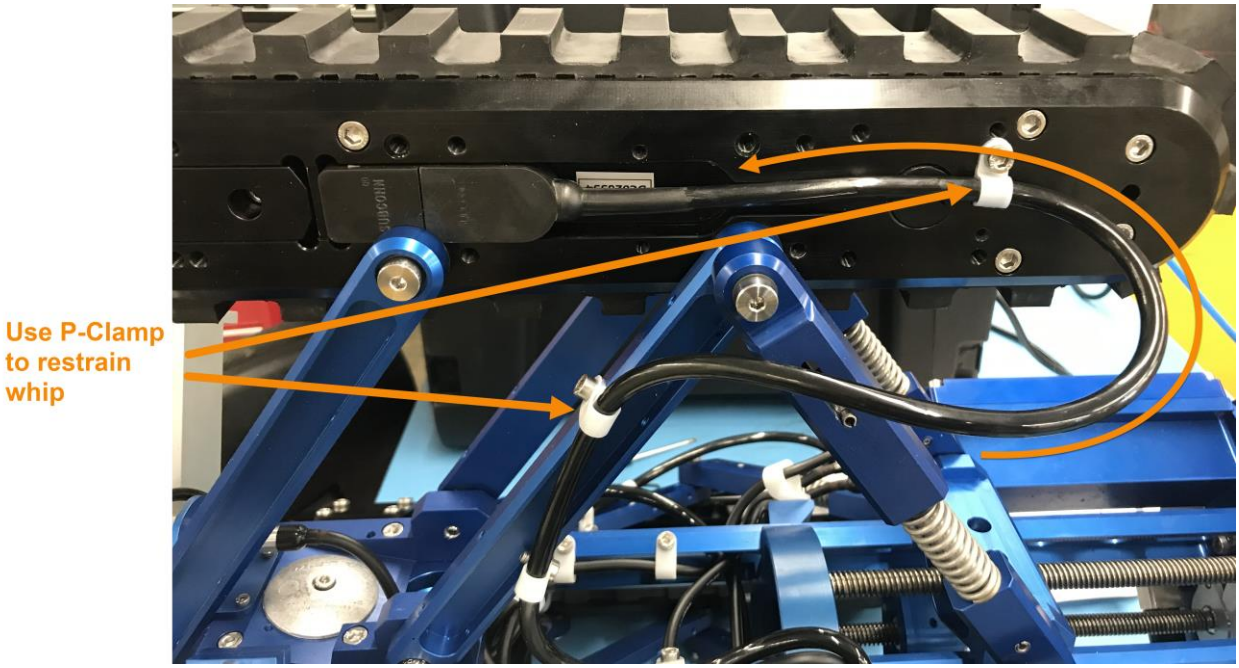
Use P-Clamp
to restrain
whip

Track Extensions

To accommodate larger pipe sizes the extension system must be installed.

To install the track extensions (having already removed the tracks), do the following:

1. Screw the shoulder bolts into the extension platform – *make sure to include the washers on the inside of the linkages.*
2. Attach the track mount plates to the extension frame using M6 x 16 mm SHCS.
3. Mount the track to the extension plates with M6 x 16 mm SHCS.
4. Install the track connector - *make sure to lubricate the male connector on the track.*

It is recommended that extended length Minitracs™ be used when operating in larger diameter pipes.

Note: Instructions for changing to extended tracks are found in the MT8000 manual.

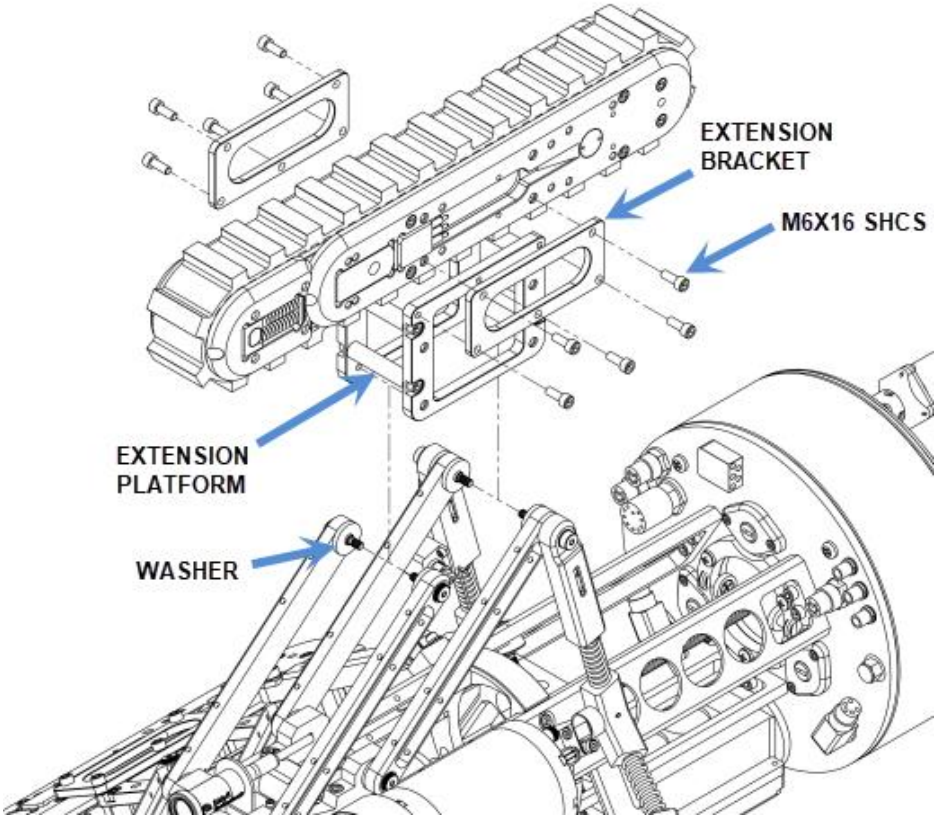

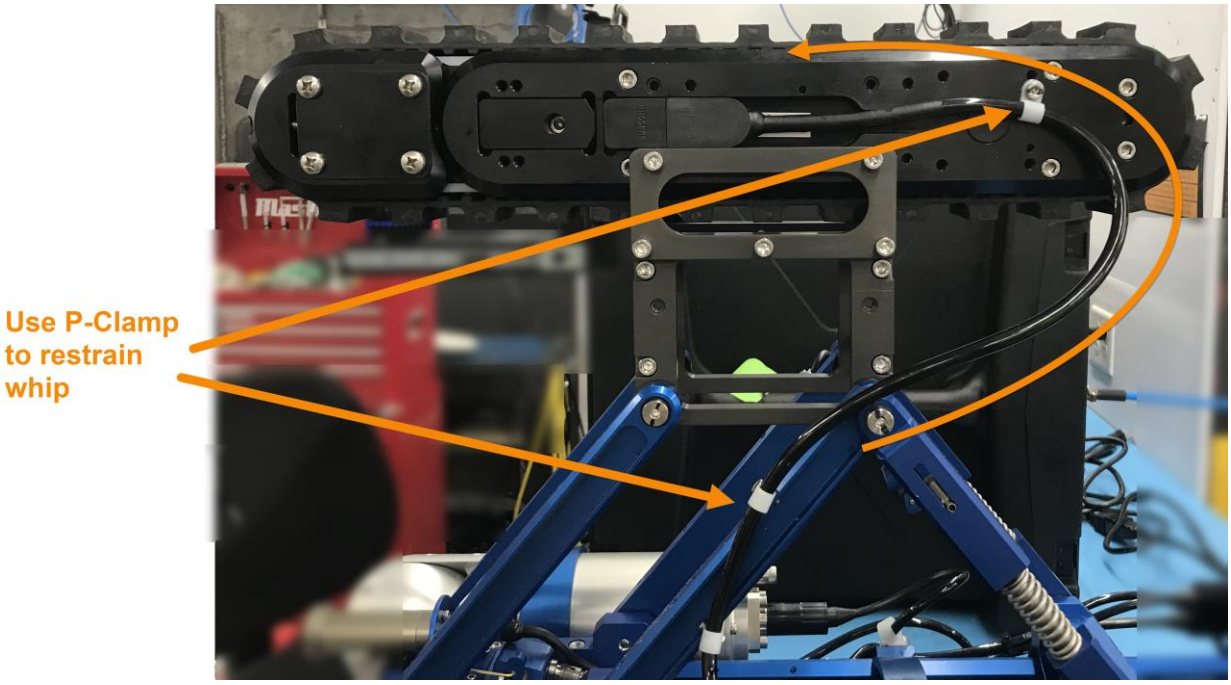

Probe Shuttle and Rotate Module

A probe shuttle can be added to the system to allow the deployment of NDT equipment to difficult-to-reach locations. The shuttle features two actuators: a rotate actuator to allow 360° positioning of the probe, and a radial shuttle to accommodate pipe size changes and intrusions.

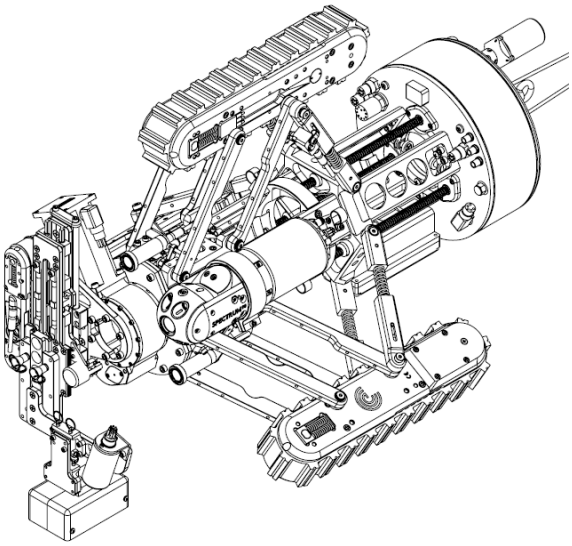

Rotate Module Installation

To mount the Rotate module, first install the mount plate to the chassis using the six (6) M6x20mm Flat head screws. Ensure that the screws are tight and install with Loctite 243(blue). Next, attach the second mount plate to the rotate module with four (4) M6x20mm Flat head screws. Mate the two mount plates together, ensuring the flats are aligned, and fasten them together with the six (6) M6x12mm Socket head screws.

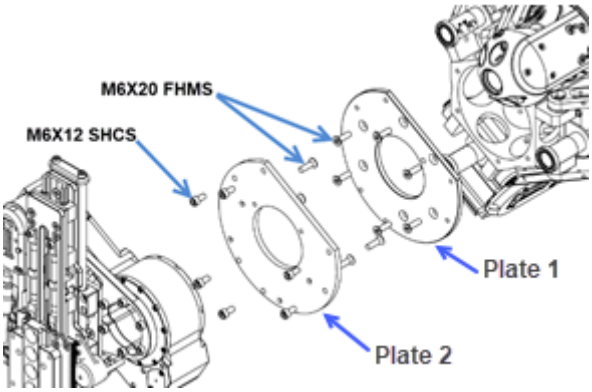

The Rotate module with Probe shuttle can be removed entirely by removing the six (6) screws holding Plate 2 onto Plate 1.

The cable harness for the entire Probe and Shuttle Assembly can be added or removed by connecting/disconnecting the 5 position Subconn whip on the Rear Power Canister. The whip will need to also be removed or routed through the P-Clamp located on the side of the vehicle.

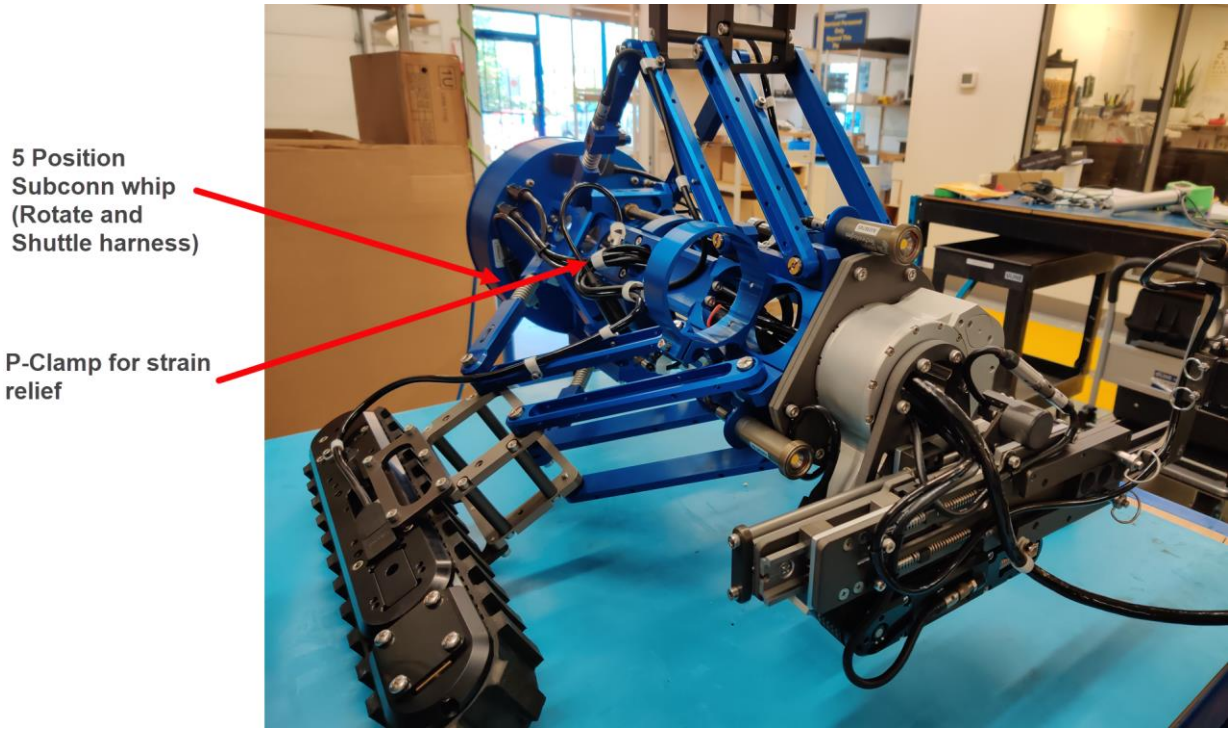

Probe Shuttle Installation

The Probe Shuttle is mounted to the Rotate Module with six (6) M6x20 socket head screws. Align the notches in the shuttle mounting flange with the rotate module and install screws, ensuring to use Loctite and sufficient torque.

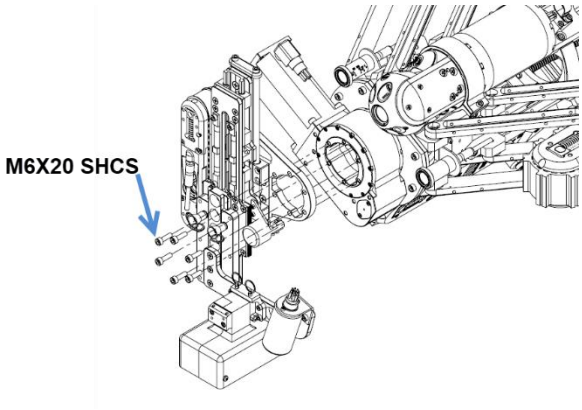

IMPORTANT: The entire Rotate module **with** Probe shuttle can be removed by removing the six (6) screws holding Plate 2 onto Plate 1.

Adjustments for Large Pipe Sizes

The shuttle has two positions to accommodate small and large pipes and it can be adjusted by removing the two quick-release pins and extending the slide.

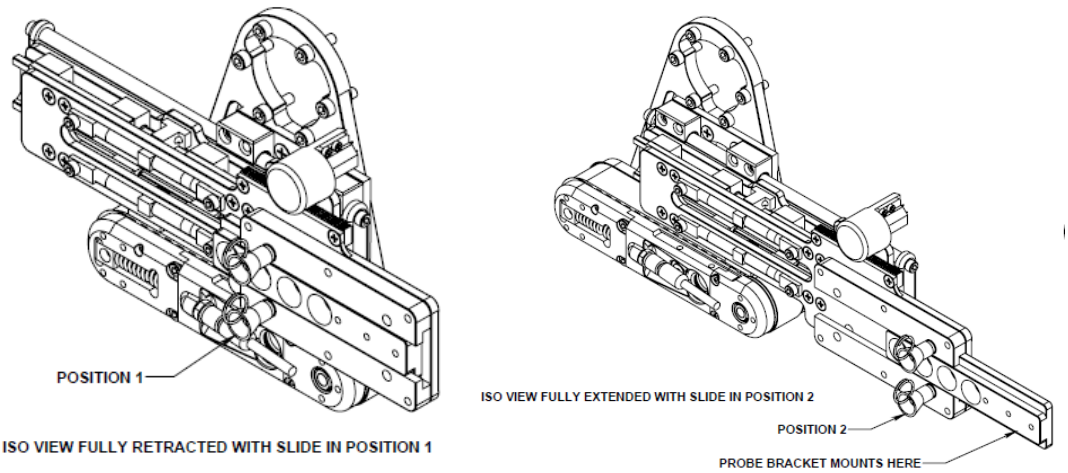

R-Scan Probe Holder Assembly

The Siverwing R-Scan probe can be used on the TT380 probe shuttle.

A small modification is required to install the R-Scan to the mount. Four mounting keys are to be installed on the R-Scan probe. To do so, carefully remove one screw holding the side plate of the probe. Install an M3x12 pan head screw and thread it in until it is almost seated with the mounting key. Remove the second screw from that corner and install the second screw through the key. Repeat on all four corners.

IMPORTANT: Removing more than one screw at a time without replacing it can cause damage or unintended disassembly.

IMPORTANT: Install fasteners with Loctite 243 (blue), taking care not to contaminate the painted surfaces of the R-Scan with Loctite when installing.

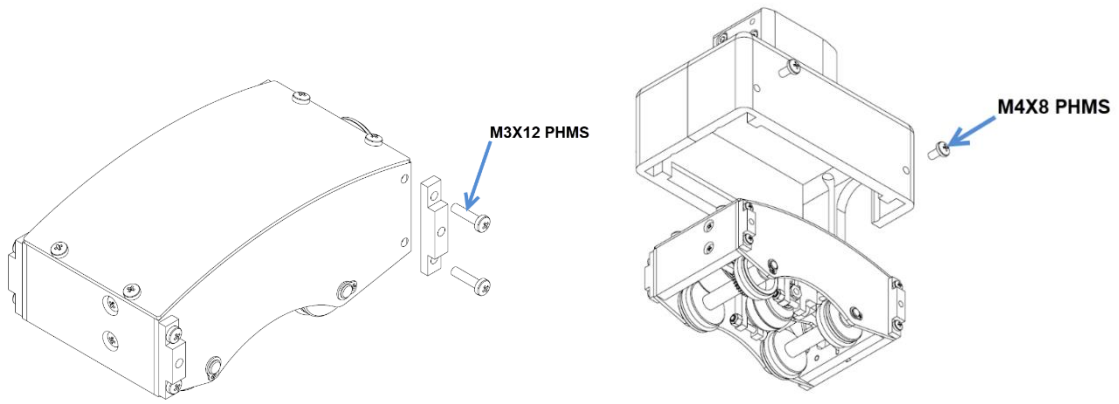

R-Scan Installation

The R-Scan and its extension bracket mount using a quick-release system.

To install the probe on the Shuttle Assembly, simply place the groove on the bottom of the mount block onto the pin of the mount receiver and tilt the probe back until the locking pins click into place. It is recommended to orientate the R-Scan probe so that the probe cable is in front of the assembly.

IMPORTANT: Visually confirm that the quick release pins have fully seated, if they are not, gently push down and twist the pull rings until they are seated.

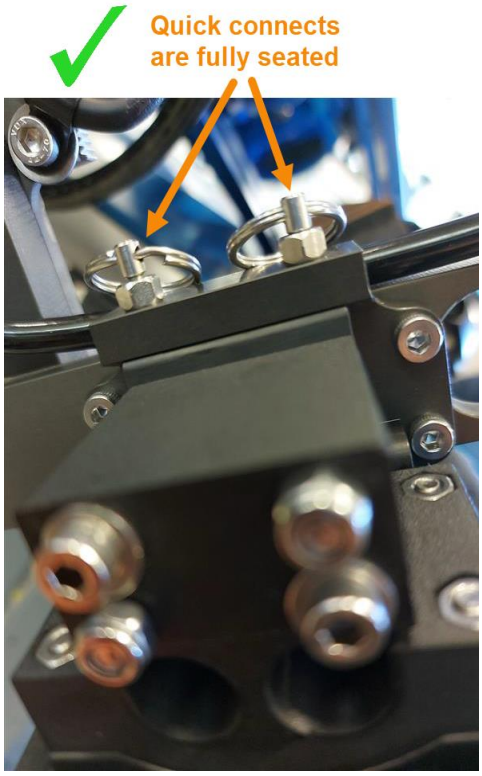
Quick connects
are fully seated

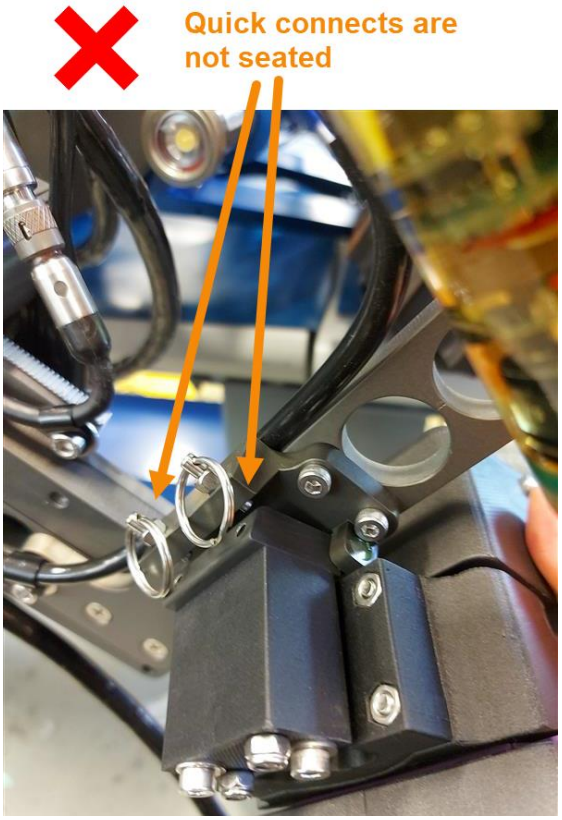
Quick connects are
not seated

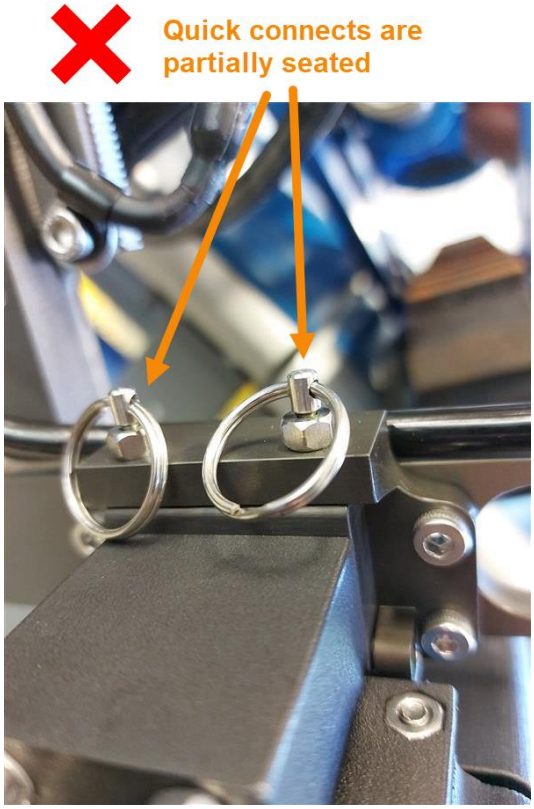
Quick connects are
partially seated

To remove from the quick release mount, simply pull up on the quick release pins. If the pins are difficult to retract, gently twist the pull ring while pulling them.

R-Scan Cable Routing

It is recommended to orientate the R-Scan probe so that the probe cable is in front of the assembly.

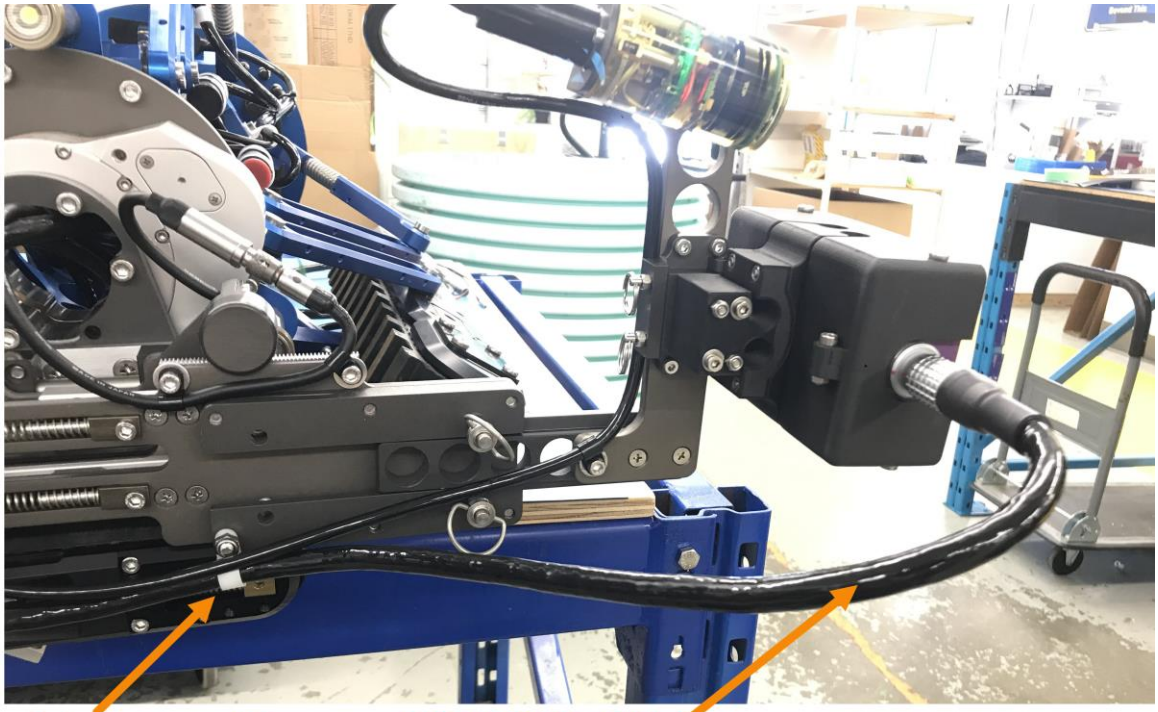

P-Clamp is loose enough for cable to slide through

R-Scan Probe cable

The R-Scan Probe cable can pass through the center bore of the vehicle to ensure that the cable is free from moving linkages. The R-Scan probe cables should be routed and attached to the TT380 chassis for strain relief using a toe cable or Kellems grip attachment.

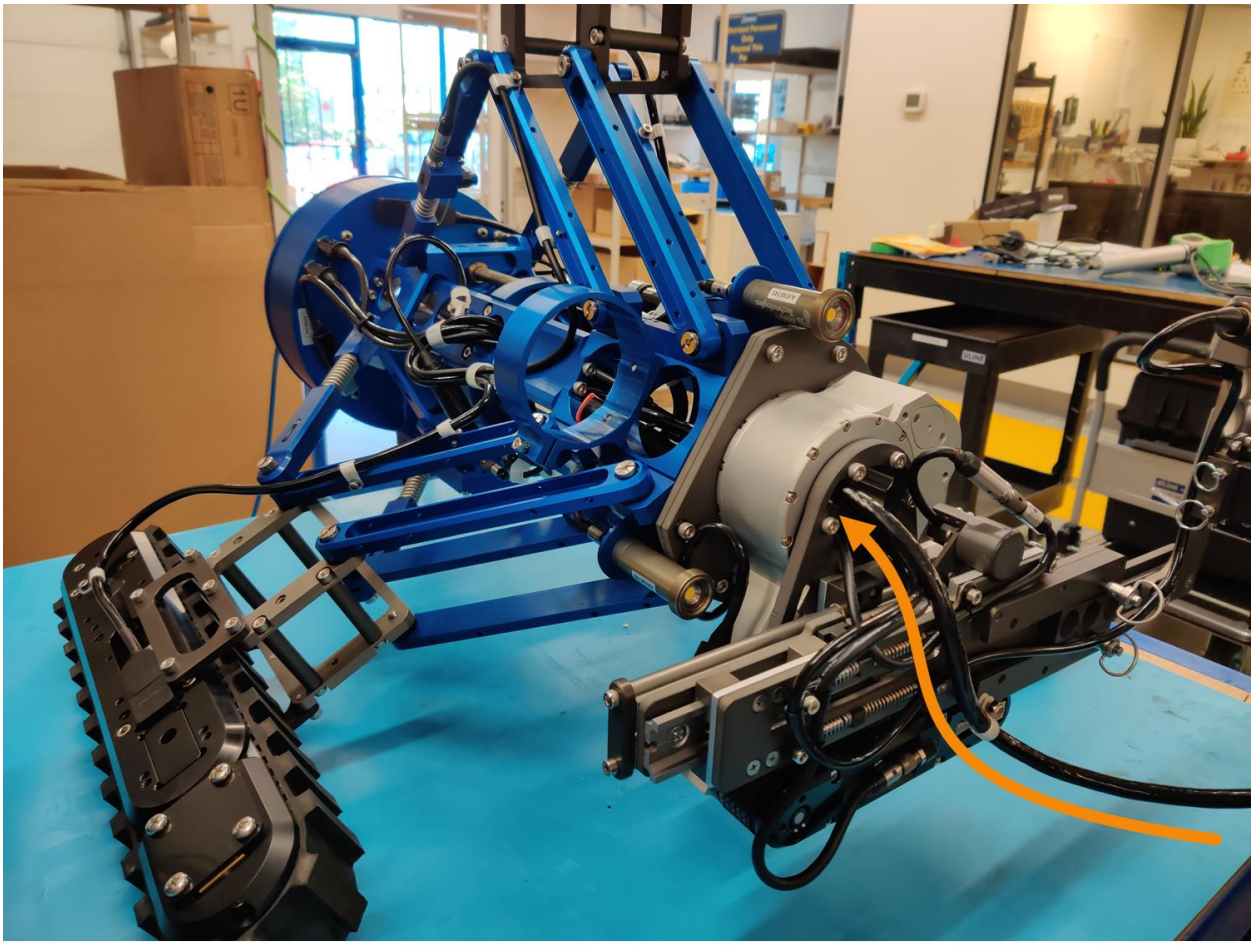

R-Scan Probe cable routed through center bore

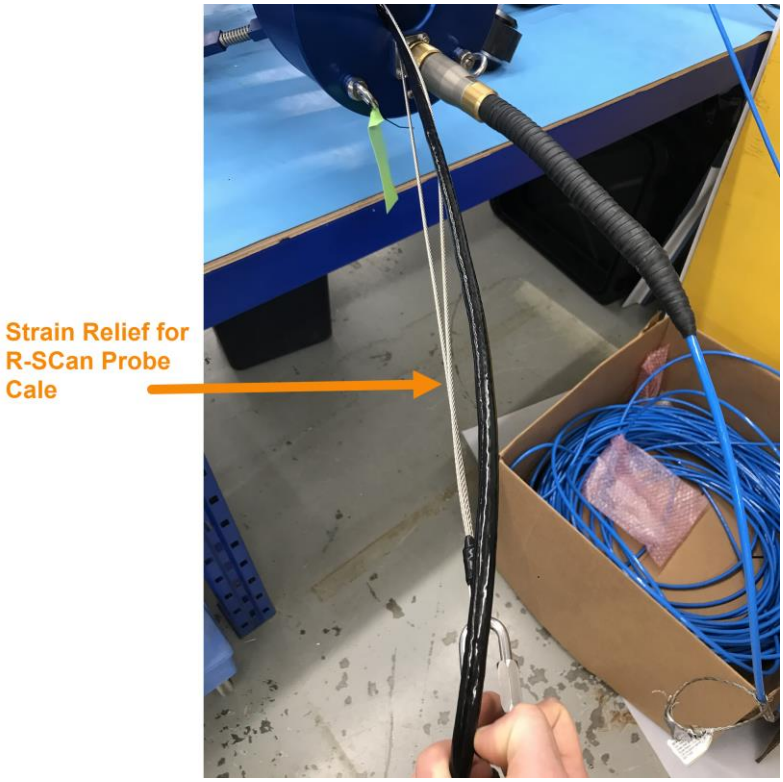
Strain Relief for
R-SCan Probe
Cale

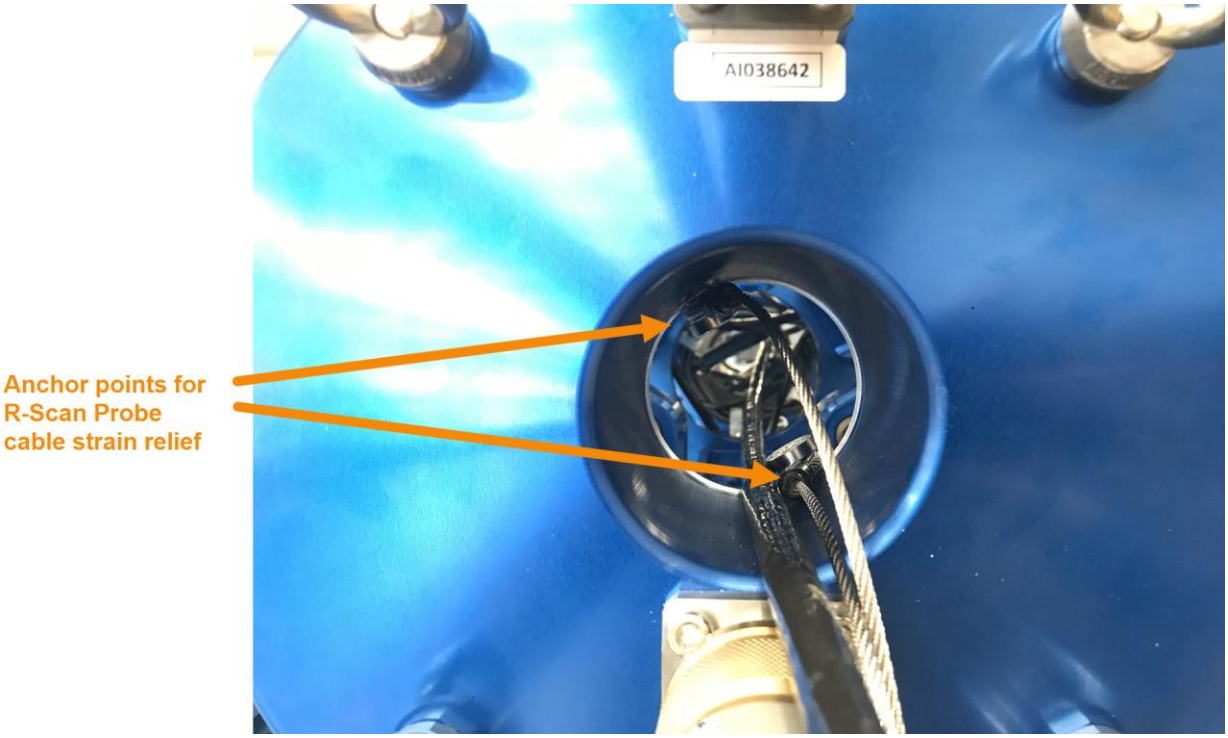
AI038642
Anchor points for
R-Scan Probe
cable strain relief

Operation

Pre-Operations Check

Before each deployment of the TriTrax™ 380 system, ensure everything is completed on the following checklist:

- ❑ Check that the work area has been safely set up.
- ❑ Check that the line voltage available at the worksite matches the equipment setup.
- ❑ Check that power and deck cable connections are correct.
- ❑ Check the vehicle for the following:
  - ❍ Check that the vehicle is in the correct configuration for the deployment.
  - ❍ Check the vehicle for mechanical damage to the chassis or cable harnesses which could affect its operation.
  - ❍ Ensure that all fasteners are in place and secure. In particular, check the fasteners holding on cameras, lights, tracks and tow cable.
  - ❍ Visually inspect the vehicle and Minitracs™ to ensure that the moving parts are free of debris and functional. Make sure the track belt is free of debris and turns freely.
  - ❍ Check the tether and vehicle whips for damage.
  - ❍ Ensure camera viewports are clean.
  - ❍ Check the 801 lights are clean and operational
  - ❍ Check that the lead screws on the raise mechanism have been well lubricated.
- ❑ Check the winch/reel for the following:
  - ❍ Check that nothing will block movement of the level wind shuttle.
  - ❍ Check that the tether has no loose, dangling coils. Dangling coils can propagate as the drum rotates and have the potential to jump the drum. Take care of these before deploying the tether.
  - ❍ WINCH - Check that no objects, tools, etc., have fallen into the winch mechanism around the chain and drum.
  - ❍ WINCH - Check that the drum lock is disengaged and latched open.
  - ❍ WINCH - Ensure that the drive clutch moves freely and is operational.
- ❑ Power up the system and check the following:
  - ❍ Check for enough SSD drive space for recording.
  - ❍ Check record directories are set.
  - ❍ Check video quality and camera control functions.
  - ❍ Test video recording.
  - ❍ Test main lights.
  - ❍ Test track control.

Post-Operations Check

A Post-Ops inspection should be carried out after every deployment using the following checklist:

- ❑ Inspect the tether for damage as it is reeled in.
- ❑ Visually inspect vehicle for entrained debris or mechanical damage.
- ❑ Test each function to ensure proper operation.
- ❑ Clean the system by hosing it down with water at regular line pressure. Do not pressure wash. The tracks may be cleaned off by hosing them down while running. If the system has been used in salt water, thoroughly rinse the vehicle with fresh water right away.

> **CAUTION:** Do not use a pressure washer to clean the camera. Very high-pressure water can push past seals and flood the camera resulting in electrical damage or personal injuries.

- ❑ Take time to pack the system properly for transport away from the worksite.
- ❑ Store the system in a dry environment.

Note: Ensuring the TriTrax™ system is always stored in good working condition will minimize deployment time for future inspections.

Power-Up Sequence

After all wiring connections have been made, the system may be powered up. The recommended sequence for power-up is as follows:

1. Power up the control computer and allow time for it to fully boot.
2. Switch on the Interface Box.
3. Turn on the Vehicle Power Supply.
4. Start the ICON control program.

ICON always begins with identification of attached system components (cameras, tracks, etc.). If vehicle power is turned on after ICON is started, the system will not function until ICON is closed and restarted.

Power Supply Operation

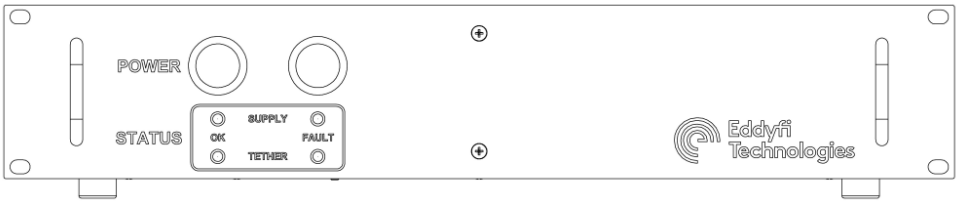

The front of the high voltage power supply includes power on and off buttons as well as status indicators. The ON button and status indicators will light green during normal operation. The two red fault indicators may light momentarily during startup and shut down; this is normal.

To turn on the power supply, press and hold the green “ON” button for approximately half a second. The “ON” button will illuminate, and output power will be enabled.

Pressing the red “OFF” button will turn the unit off and will reset any fault alarms.

Note: Pressing the “ON” button very quickly may not allow the power relays enough time to latch. The unit will not turn on fully and the supply fault indicator may light. If this occurs, reset by pressing the “OFF” button and restart the unit.

Ground Fault Detection & Alarms

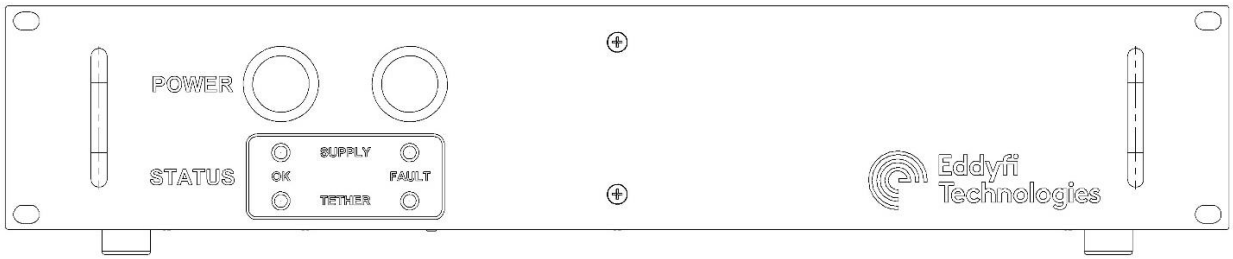

The front of the high voltage power supply includes power on and off buttons as well as status indicators. The ON button and status indicators will light green during normal operation. The two red fault indicators may light momentarily during startup and shut down; this is normal.

There are two status indicators:

1. **Supply:** This is the main power supply providing 400 VDC to the tether. A **SUPPLY** fault warning will trigger if the AC power input drops below 85 VAC or if the power supply reaches over-temperature levels. The power supply will be automatically shut down.

2. **Tether:** The power supply is also equipped with fault detection which monitors potential current leakage from the high voltage power feed to the tether and vehicle. A **TETHER** fault warning may indicate possible damage to the tether cable or water leakage inside the harness block or Minitracs™. This fault will also be triggered if the output fuse has blown due to a short circuit.

Tether faults should not be triggered under normal operation and may be an indication of a major device malfunction or a potential safety hazard. If a tether fault is announced, the power supply should be disconnected and the reel, deck cable, tether, and vehicle harness whips should be inspected for damage. If all cabling looks good, the Minitracs™ and integrated harness block should be examined.

If either of the fault indicators trip, the power supply will automatically disable power to the tether and vehicle. The corresponding status indicator will light red, and the **ON** button will flash to indicate external power has been disabled. The power supply will not re-enable vehicle power until it has been reset by pushing the **OFF** button.

WARNING: A ground fault alarm may be an indication of a safety risk. The system should be turned off and carefully examined before powering back up.

Note:	The GFI fault detector monitors the high voltage DC power feed only and is not a replacement for a proper GFCI protected AC power outlet.

ICON™ Software

Vehicle control, video recording and export are accomplished using ICON graphical interface controller software. The manual for ICON is integrated into the software or available in PDF format on the control computer's desktop.

- ICON Manual – Accessed through ICON or Desktop Shortcut.

ICON™ Control Panel

The TriTrax™ 380 Vertical Crawler is operated using the ICON™ Software vehicle control panel.

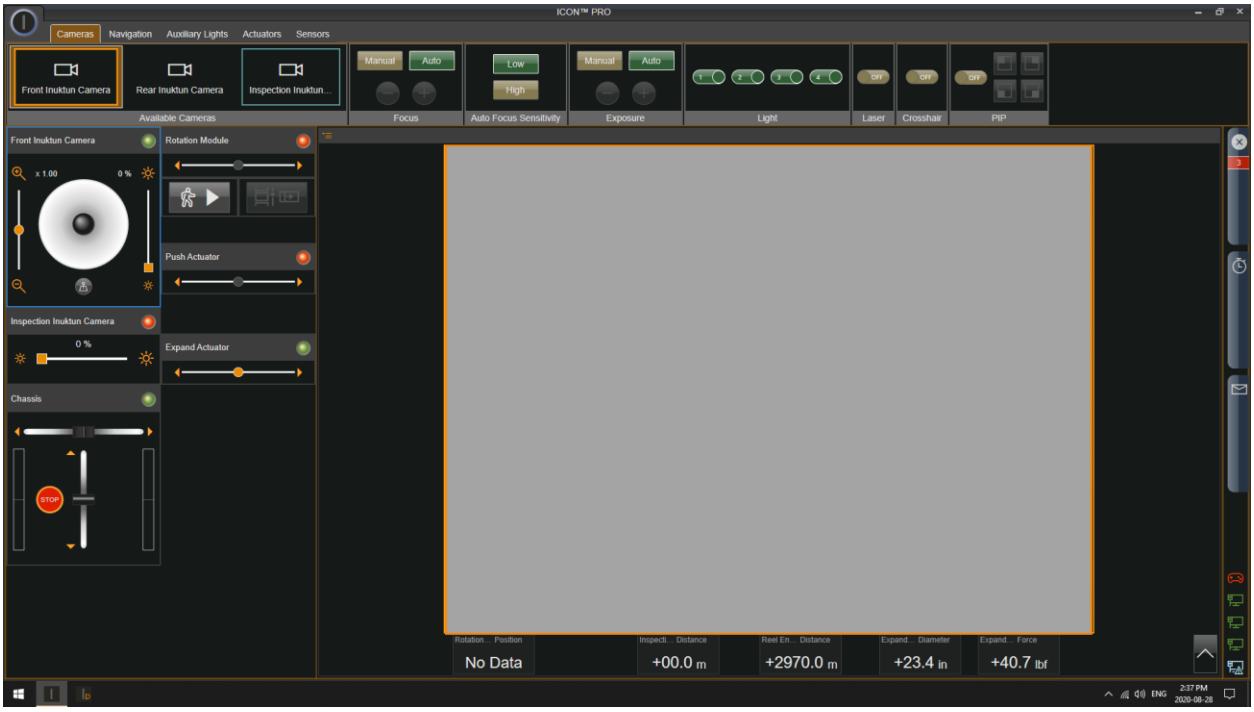

Vertical Operation

The TriTrax™ 380 Vertical Crawler operates much like a VersaTrax™ vehicle, except with a third track on top. The bottom two tracks work as an ordinary tractor pair controlled by the track control slider. An

averaging function inside the controller automatically runs the third track at the average speed of the lower pair. For example, when driving straight forward or straight back, the top track runs forward or backwards at the same speed as the two lower tracks. However, when turning, the top track slows to a speed in between the lower two tracks. When executing a spot-turn, the top track does not move at all.

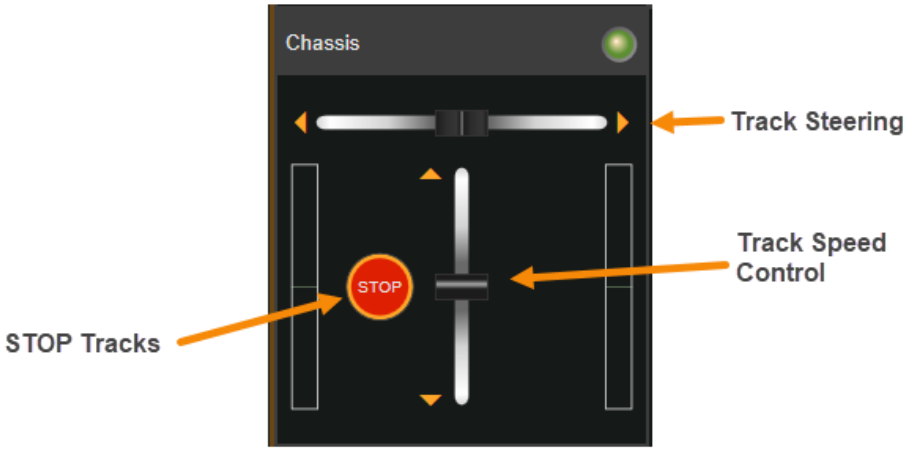

Vertical Crawler Expand Mechanism

The TriTrax™ 380 Expand mechanism is controlled by the Expand Actuator control window.

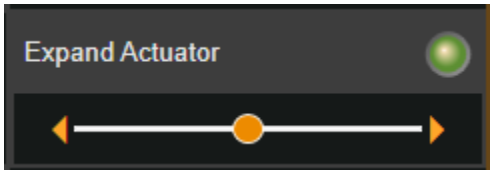

The mechanism can go slightly smaller or larger than the nominal minimum/maximum pipe sizes to accommodate insertion and maintain full contact in the largest pipe. Contact force is controlled by expanding the mechanism an additional amount after full contact with the pipe. Springs in the linkage will increase the track pressure as the mechanism expands. The expanded size and contact force are measured at the vehicle and the Instrument panel can be configured to display the measurements for the operator in pounds, newtons or kilograms.

Feedback is internally calibrated for the 18 to 26-inch configuration. To use with other configurations, for instance, with under-slung tracks, subtract off 3.0 inches [76.2 mm] from the reading. When using track height extensions, double the single extension height and add it to the reading. When using the 5-inch extension bracket, add 10 inches [254 mm] to the diameter.

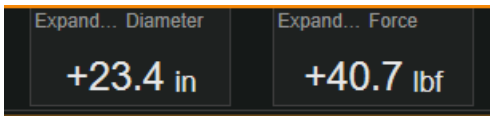

Because the springs are pre-compressed, there is a minimum contact force that is displayed at all times, regardless of whether contact is made. Beyond the minimum force, the springs will compress allowing true measurement until they bottom out.

To ensure the vehicle is gripping the pipe, the operator must adjust the force beyond the minimum according to the table below. As seen in the table, the maximum measurable contact force increases with the pipe size. Be careful not to allow the contact force to decrease below the minimum or increase beyond the maximum. Beyond the measurable range, the operator cannot know how much fore is applied. In such condition the TriTrax™ 380 Vertical Crawler may lose traction and fall or may become jammed or damaged from excessive force.

[Feedback based on 18 to 26-inch configuration]

Pipe Diameter		Min Force [lb]			Max Force [lb]		
mm	Inch	lbf	N	kg	lbf	N	kg
450	17.7	20.5	91	9.3	48.7	216	22.1
457	18	21.5	96	9.8	51.2	228	23.2
483	19	25.1	111	11.4	59.7	265	27.1
508	20	28.6	127	13.0	68.1	303	30.9
533	21	32.1	143	14.6	76.6	341	34.7
559	22	35.6	158	16.2	85.0	378	38.6
584	23	39.1	174	17.7	93.5	416	42.4
610	24	42.6	190	19.3	101.9	453	46.2
635	25	46.2	205	20.9	110.4	491	50.1
660	26	49.7	221	22.5	118.8	529	53.9
686	27	53.2	237	24.1	127.3	566	57.7

Some care must be taken during certain transition maneuvers between pipe sizes, for example:

- Crawling upwards, transition from small to large pipe: This is the safest transition with no danger of falling or mechanism overload.
- Crawling upwards, transition from large to small pipe: This is the most dangerous transition, with danger of falling and mechanism overload. We suggest this maneuver be attempted only in smooth pipe transitions and never in large steep transitions.
- Crawling downwards, transition from large to small pipe: This is a relatively safe transition but be sure to reduce the size of the mechanism to prevent overload.
- Crawling downwards, transition from small to large pipe: The crawler will fall until it expands to the next pipe size. This maneuver can be dangerous if the next pipe size is too large for the mechanism. If possible, hold the vehicle back by the tether until the mechanism contacts the pipe again.

Optional Rotate Module Control

ICON™ Software can be configured to support the optional Rotate Module Control. The TriTrax™ 380 Rotate Module is controlled by the Rotate control window. The Rotate Module supports position control so that the Operator will move the position set-point and the Rotate Module will rotate to desired position.

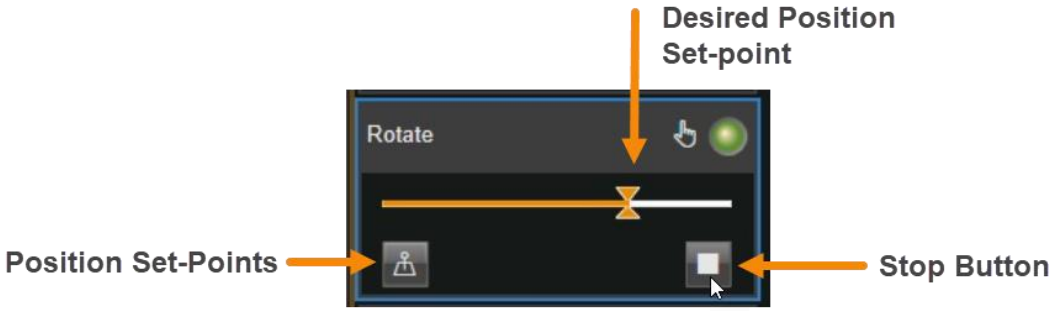

Rotate position feedback can be displayed in the instrument panel. The zero position can be reset following the steps below in “Calibrating Rotate Module”.

The Rotate Module can be configured by the Operator to change the zero point or add set-points for repeated operations.

Calibrating Rotate Module

Navigate to the ICON Backstage -> Calibration -> Rotate -> Position. Press the “Calibrate” button to begin calibration routine for the Rotate Module.

Start Calibration:

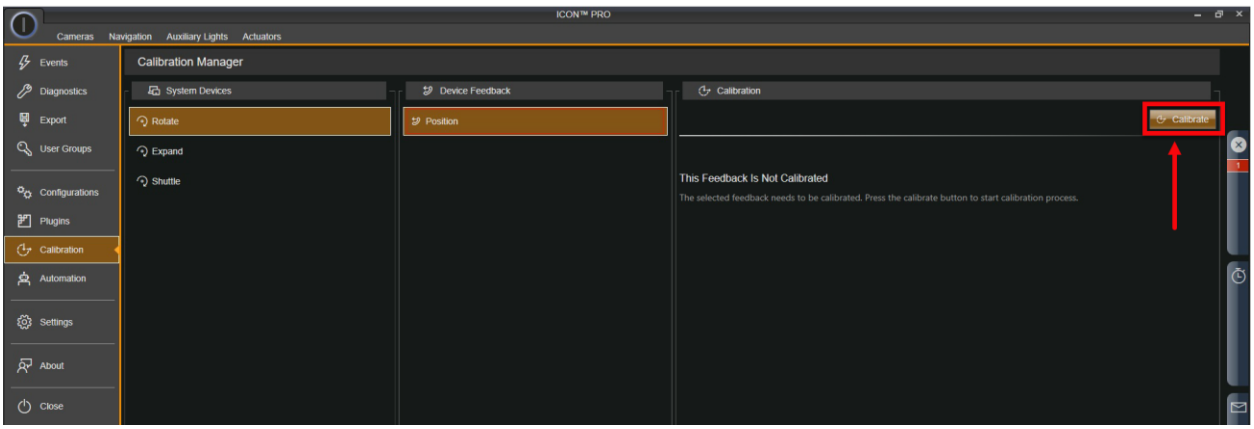

Step 1: **Begin Calibration**

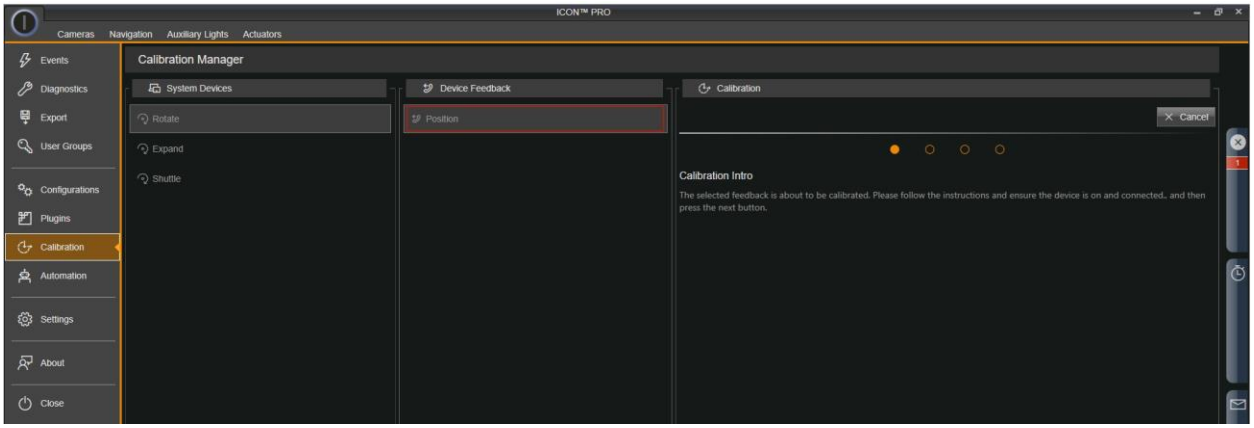

Step 2: **Set minimum Rotate position**

Use the rotate slider to the left to move the rotate module to the minum position of -200°. Do not over rotate as this will cause cable damage.

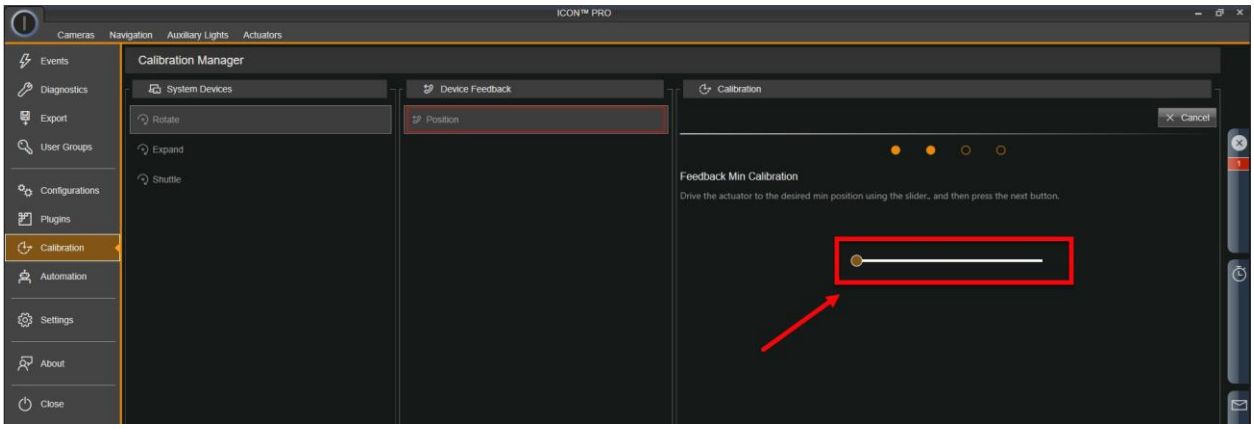

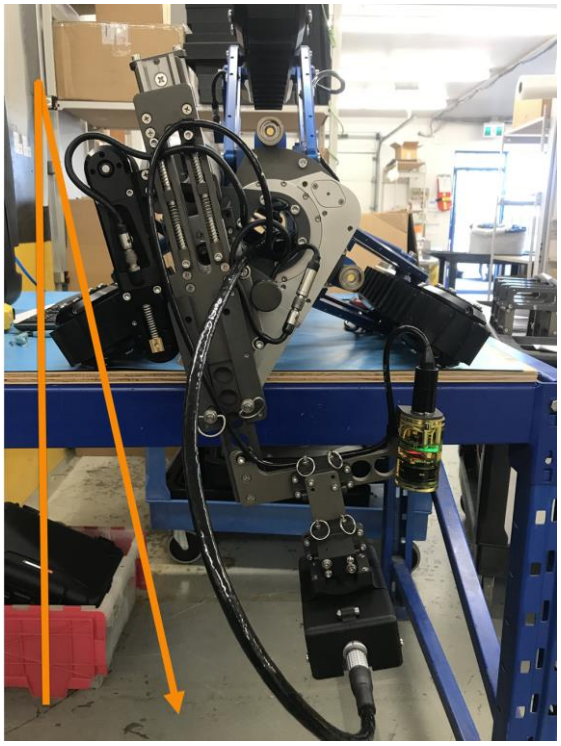

<u>Step 3:</u> Set maximum Rotate position

Use the rotate slider to the right to move the rotate module to the maximum position of +200°. Do not over rotate as this will cause cable damage.

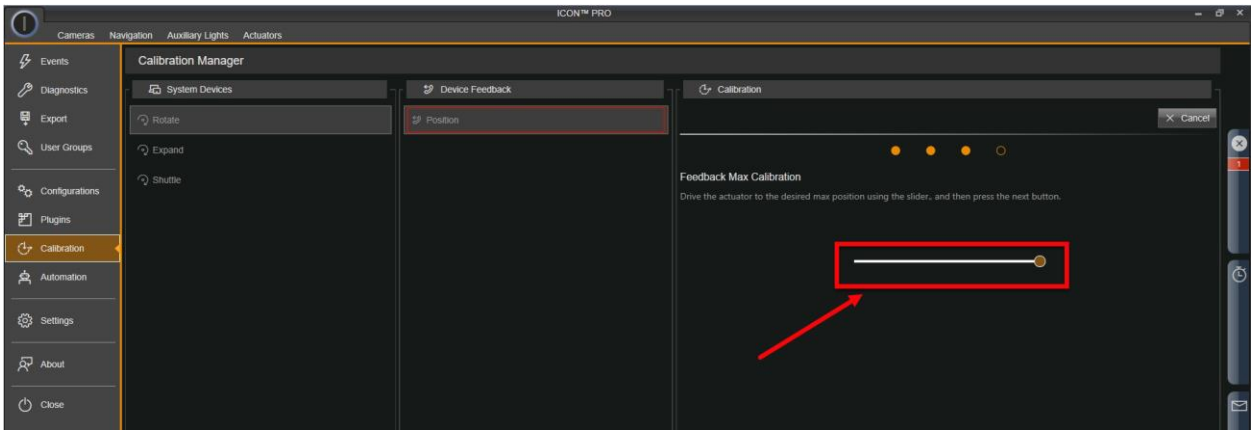

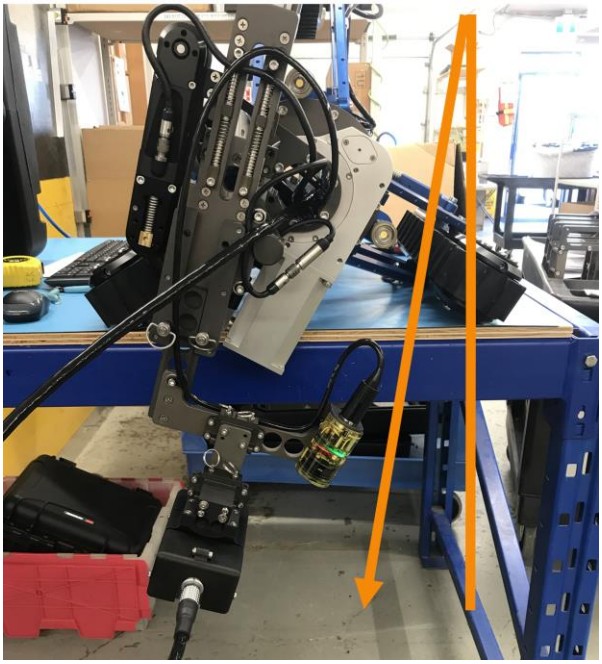

<u>Step 4:</u> Zero Point

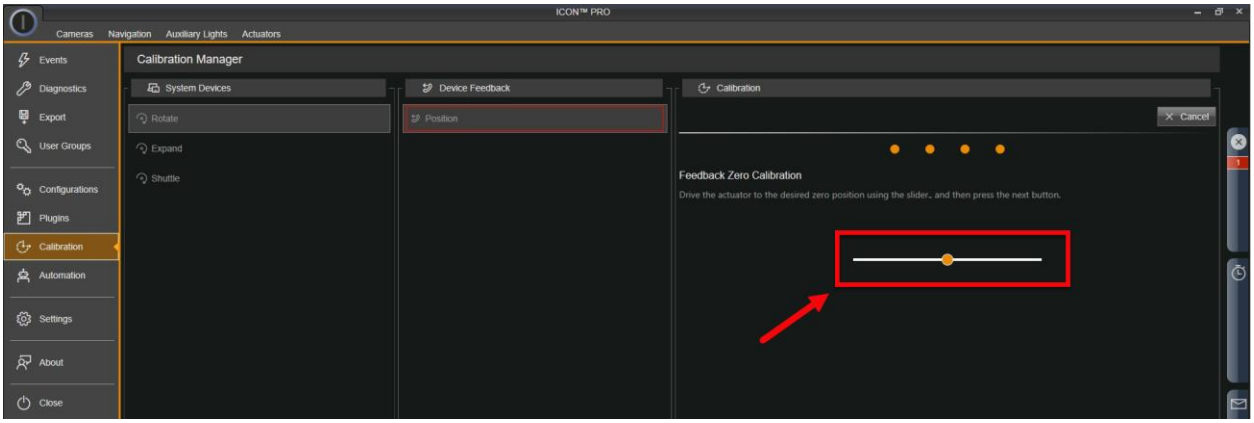

Use the rotate slider to the move the Rotate Module to 0° (Zero position). Do not over rotate as this will cause cable damage.

Optional Shuttle Assembly Control

ICON™ Software can be configured to support the optional Shuttle Assembly Control. The TriTrax™ 380 Shuttle Assembly is controlled by the Shuttle control window. The Operator will move the slider to the right or left to expand or contract the shuttle.

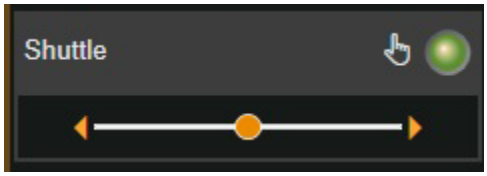

Video Channel Control

ICON™ Software can support two video channels for display and recording. The operator can switch between the three cameras located on the TriTrax™ 380 vehicle.

- ‘Observation Inuktun Camera’ = Crystal Cam® Sapphire camera on Shuttle Assembly
- ‘Rear Inuktun Camera’ = Crystal Cam® Sapphire camera at rear of vehicle
- ‘Front Inuktun Camera’ = Spectrum 90™ camera

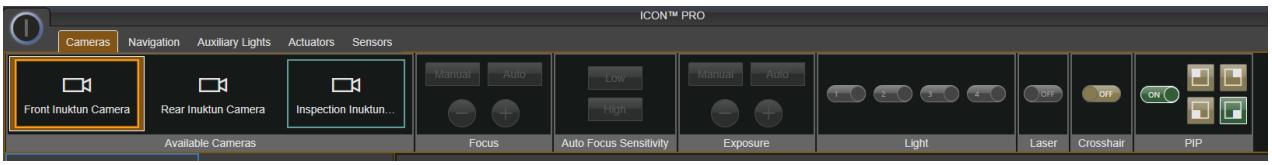

Select 'PIP' (Picture-in-Picture) ON and 'Front Inuktun Camera' to view both the inspection camera and Spectrum 90™ simultaneously.

Dealing With Obstacles

The operator will invariably encounter a range of obstacles in a pipe. Each time the operator must decide if the vehicle can safely pass or if there is risk of getting stuck. Common obstacles include but are not limited to:

- Crushed pipe
- Sand
- Rocks and/or debris
- Roots
- Intersecting service pipes
- Animals and their nests

If the operator is unsure about pipe navigability, he or she should consult with the site supervisor before moving forward.

Inspection Guidelines

The objective of an inspection is to obtain a recording of video and other data for review by the customer or pipe owner. If a recording is lost, fails to record, or is of poor quality the inspection will likely have to be re-done at the operator's expense. Therefore, it is in the operator's best interest to verify vehicle operation, video quality and recorder function before beginning each inspection.

A set of video overlay comments and data are usually required depending on the contract or client. Initial comments will usually include the location, pipe number and date. During the inspection the contractor may require certain pipe features or faults to be pointed out along with the distance from the pipe entry.

Conduct a complete inspection of pipe features and faults. For any feature or situation of interest, stop the vehicle and make a complete video survey using the continuous pan feature of the camera. Ultimately, the inspection is conducted for the benefit of the client who is reviewing the footage later on.

Powered Winch Operation

Refer to the winch manual for winch installation and operating instructions.

Vehicle Recovery

In the event the vehicle becomes disabled while on a mission in a pipe, provision has been made for recovery of the vehicle by pulling it out with the tether. Recovering the vehicle by pulling is a serious operation and can put great demand on the tether system. Listed below are three scenarios where the vehicle may need to be recovered. Loading the tether beyond its maximum safe capacity should be considered only as a last resort.

Note: Prevention is always the best policy. When traveling through a pipe or in any unknown area, carefully watch your monitor.

The vehicle may become stuck if it is traveling through a damaged pipe section or improperly steered around a corner. If the vehicle does become stuck:

1. Determine if it is the vehicle or the tether that is stuck. Look back at the tether with the camera if possible. If the vehicle can back up but the tether will not reel in, the tether is caught on something. Try to look for and fix the cause of the catch *before* putting any more strain on the tether. The operator should use any dexterity available first to free the vehicle without resorting to force.
2. If the vehicle cannot work itself free from a snag, try using *light* tether tension and tractor power simultaneously.
3. If still stuck, try a stronger tether tension.
4. If the vehicle seems to be permanently stuck in the pipe, the supervisor must decide whether to sacrifice the tether in order to pull harder, or to dig the vehicle out.

Troubleshooting

Camera Control Problems

- Not all the auxiliary lights are on.
  - The ICON™ software allows the lights to be controlled independently. Ensure all lights are enabled. Refer to the ICON interface manual.
  - Inspect for blown LEDs.
- Warning: High Intensity. Do not look directly into the lights. Use a welding filter (shade #8) to observe the light elements.
- Camera pan or tilt does not function in one or both directions.
  - Check that the camera is not jammed.
  - If you can hear a motor running but see no movement, there is a mechanical or clutch problem inside the camera. Contact us.
- Camera is moving very slowly.
  - Check the pan & tilt speed in the camera control window. Refer to the ICON user interface manual.

Video Problems

- No video (black or blue background)
  - Interface box is not turned on.
  - Video cables are not hooked up between interface box and computer.
  - Camera connector on vehicle is loose (turn power off first before plugging in camera).
  - Check that the camera harness whip is plugged into the correct socket on the telemetry can.
  - Check monitor input settings.
- Vehicle power is not on.
  - Check for problems with other video components between the computer and monitor.
  - Try a different monitor. Whole days have been spent on field maintenance trips only to discover a faulty monitor.
- Picture is very dark or very bright.
  - Check the light levels of both the camera and main lights.
- Intermittent picture.
  - Check and replace the video cables.
  - Check the monitor is working properly.
  - Check that the camera harness whip is fully plugged in.
  - Check for intermittent breaks in the camera harness cable.
  - Check the tether connectors at both controller and vehicle.
  - Check for tether or slip ring damage by testing tether continuity.
- Picture is blurry, will not focus, or has poor color.
  - This may be a dirty camera view port, or a narrow object lying in front of the view port.
  - Object may be too close to the camera.
- No Rear Video
  - Verify the video connection from the interface box to the computer.
  - This may be a dirty camera view port, or a narrow object lying in front of the view port.

Vehicle Problems

- Vehicle won't steer or vehicle runs backward.
  - Tracks set to the wrong positions.
  - Track reverse setting incorrect in control software.
  - Node ID conflict between one or more devices on the vehicle.

- Tracks will not run.
  - Check the track current feedback (See ICON™ manual).
    - If current is at 100% and the vehicle doesn't move, then the tracks may be jammed. They could be wedged on an object or jammed with sand. Try reversing the tracks to clear debris. If a jam does not clear you will have to recover the vehicle by pulling it out with the tether.
    - If no current registers, then power or communication is not getting to the tracks. Check all the cable connections.
  - Try power cycling the system.
  - Inspect the vehicle wiring for damage.

  - Check all the system connectors.
  - Try restarting ICON™
  - Listen for the track motors. If the motors run but the track doesn't turn, there is a problem with the gearing or shaft pins.
  - Try changing tracks. (ICON will require a restart.)
- Track Raise will not move.
  - Check the linkage between the top linkage and the encoder feedback
  - Check the connector to the camera raise motor.
  - Try restarting ICON.

Winch Problems

- Tether distance does not read correctly.
  - Check that the pressure wheel is pressing the tether against the payout sheave. If the tether is being pulled up from the sheave instead of down, it may be disengaged from the sheave.
  - Check that the units are set properly in the graphical overlay.
  - Recalibrate distance encoder.
  - Ensure that the correct COM port is selected in the control software.
- Winch is very noisy.
  - The short chain directly off the motor is too tight. This chain must run with some slack. Refer to the winch manual.
- Winch does not run.
  - Check that the winch has AC power.
  - Check that the Emergency STOP button has not been pressed. (Twist to reset).
  - After a power failure the run/stop switch must be reset.
  - If there are no lights on the controller, check the fuse on the winch and in the motor control box. Refer to the winch manual.
- Intermittent problems with vehicle or camera only when the winch is running.
  - This may be caused by loose connectors.
  - Slip ring may be damaged. Pin out the tether to check continuity with the winch drum turning.

Maintenance

Galvanic Corrosion Control

Eddyfi Technologies strongly recommends cathodic protection whenever the TriTrax™ 380 is being deployed in a saltwater environment – either submerged or in salt spray, regardless of camera or track material.

Eddyfi Technologies' vehicles are designed to use **aluminum** marine anodes. Aluminum anodes are common in the marine industry and are replacing zinc anodes in many areas. For vehicle systems that are often pulled in and out of the water, aluminum anodes are especially important, as zinc anodes tend to

scale over when exposed to air and may not reactivate when submerged again. An aluminum anode will always reactivate.

If the vehicle is being carried by a transport device, for example, a larger ROV, we recommend it also be protected by **aluminum** anodes or the two vehicles be electrically isolated from one another. Do not mix anode types (zinc and aluminum) on the assembly, between vehicles or between structures. There must be only one anode type throughout. Magnesium anodes must never be used with Eddyfi Technologies equipment.

Anodes are installed onto the TriTrax™ 380 as illustrated below with Loctite 243 (blue). Anodes are placed in the two lower positions underneath the 801 lights. The Spectrum™ 90 camera should also be equipped with its full complement of anodes when installed on the TriTrax™ 380. Contact your sales representative for anode replacements.

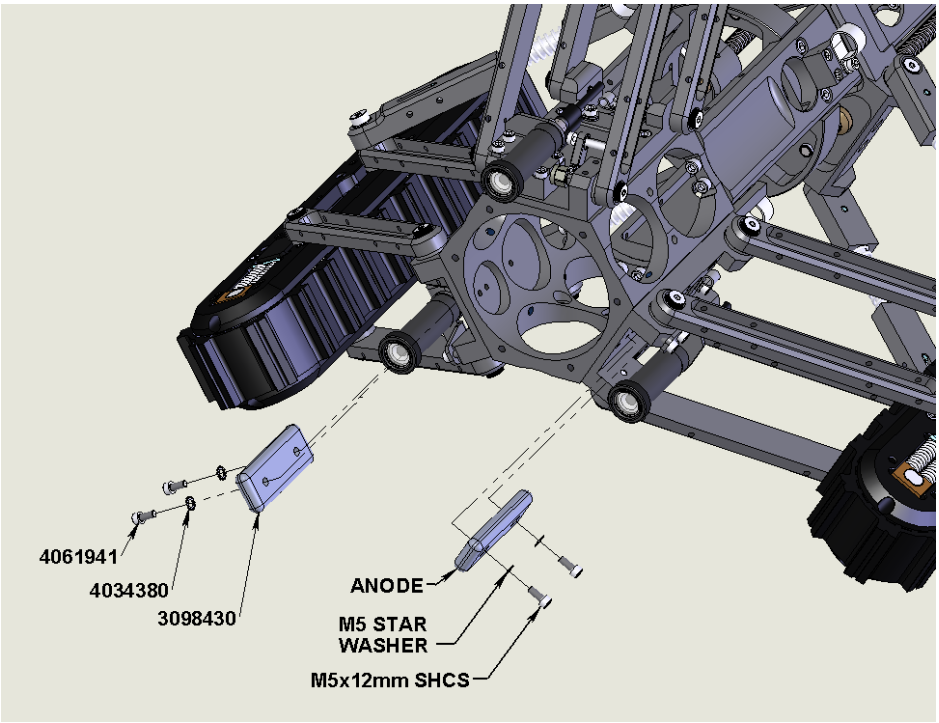

Rinsing and Cleaning

After every mission check to see if the vehicle needs cleaning.

1. If the system has been used in salt water, thoroughly rinse the vehicle with fresh water prior to being stored away. Accelerated corrosion will result if the inspection system is not rinsed properly. Pay close attention to rinsing and cleaning the camera window, LED light dome and the spaces between moving parts and track belts.
2. Use an open hose or tap at regular water line pressure for rinsing. Do not pressure wash the equipment – water will be forced into the camera at these high pressures.

3. Avoid scratching the camera port. Use glass cleaner and a soft cloth to clean the port.

CAUTION: Do not use a pressure washer to clean the camera. Very high-pressure water can push past seals and flood the components resulting in electrical damage or personal injuries.

Periodically:

1. Use a damp cloth or spray cleaner for the power supply / controller box. The box must never be sprayed down or immersed in water. Unplug the controller before cleaning.
2. For general cleaning of the cameras and tracks, use a mild detergent.
3. Clean the expansion lead screws using a mild degreaser and re-grease with Molykote G1502FM or similar grease.

Fuse Replacement

The controller and power supply contain panel mount fuses for both AC and DC voltages. These fuses are for the safety of the operator(s) as well as to protect the equipment from damage. If a fuse blows, stop and look for possible causes. Causes might include cable damage, water incursion or improper connections. *See the controller manual for fuse replacement.*

Fuse values have been carefully selected for their application. Always replace the fuses with the same type and rating.

Caution: Disconnect the power source before checking or replacing fuses.

Minitrac™ Maintenance

Refer to the Minitrac™ manual for Minitrac maintenance and servicing instructions.

Camera Maintenance

Refer to the Spectrum™ 90 PTZ or Spectrum™ 120 PTZ manual for camera maintenance and servicing instructions.

Tether Re-termination

Tether termination is a specialized service beyond the scope of this manual. Contact Eddyfi Technologies if the tether is damaged or requires re-termination.

Parts and Repairs

Ordering Parts/Customer Service

Spare and/or replacement parts are available for your product and can be ordered directly from your local office.

When ordering parts, always make sure to quote the sales order acknowledgement (SOA) number and/or the serial number of the system component in question.

Eddyfi Robotics Inc. (Canadian Headquarters and Manufacturing Location)
2569 Kenworth Road, Suite C
Nanaimo, BC, V9T 3M4
CANADA
TF 1.877.468.5886
T +1.250.729.8080
info@eddyfi.com
www.eddyfitechnologies.com

Eddyfi Technologies – US (American Authorized Distributor and Service Centre)
812 W 13th Street
Deer Park, TX, 77536
USA
T +1.281.542.3292
info@eddyfi.com
www.eddyfitechnologies.com

Warranty Repairs

Warranty conditions are specified in the Warranty section. Should any conditions of the manufacturer's warranty be breached, the warranty may be considered void. All returned items must be sent prepaid to Eddyfi Technologies at the above address.

Factory Returns to Canada

Some sub-assemblies of your Eddyfi Technologies product are not field-serviceable and may need to return to the factory for repair. Warranty claims must return to the factory for evaluation.

To return an item for evaluation or repair, first contact Eddyfi Technologies at our toll-free number or e-mail address. Eddyfi Technologies will supply a Return Merchandise Authorization (RMA) number with detailed shipping and customs instructions. Items shipped without an RMA number will be held at Eddyfi Technologies until the correct paperwork is completed. If cross-border shipments are not labelled as per the instructions, the items may be held by customs and issued additional fees.

All returned items must be sent prepaid unless other specific arrangements have been made.

When the product or system is being shipped anywhere by courier or shipping company, it must be packaged in the original packaging it was received in. This measure greatly reduces the consequences of rough handling and subsequent shipping damage.

Eddyfi Technologies cannot be held responsible for damages due to improper packaging. Shipping damage may have significant impact on repair turnaround times.

Product/System Drawing Package Availability

Mechanical assembly and electrical wiring diagram drawing packages for your equipment are available in PDF format upon request. Printed copies may also be purchased from Eddyfi Technologies. Contact your local sales contact for more information.

Limited Warranty Policy

Refer the Eddyfi Technologies website for warranty terms for this product.
https://www.eddyfi.com/en/salesterms